BID DOCUMENTS AND SPECIFICATIONS FOR HAWAII ARMY NATIONAL GUARD B1788 BOILER ROOM IMPROVEMENTS, KALAELOA, OAHU, STATE OF HAWAII, DEPARTMENT OF DEFENSE, HAWAII ARMY NATIONAL GUARD, JOB NO. CA-202610-C

ISSUED BY:
STATE OF HAWAII
DEPARTMENT OF DEFENSE
3949 DIAMOND HEAD ROAD,
HONOLULU, HAWAII 96816-4495
TELEPHONE: 808-369-3567

AUGUST 2026

TABLE OF CONTENTS

Content.		**Page No.**
Notice to Bidders		1 – 2
Drawings		3 - 27
Special Notice to Bidders		28 - 36
Special Provisions for Construction Contracts		37 - 43
Attachments.		
1. Offer Form		44 - 52
2. General Conditions		53 - 109
3. Additional General Conditions		110 - 112
4. Special Conditions		113 - 114

STATE OF HAWAI'I
DEPARTMENT OF DEFENSE
OFFICE OF THE ADJUTANT GENERAL
3949 DIAMOND HEAD ROAD
HONOLULU, HAWAI'I 96816-4495

NOTICE TO BIDDERS - CONSTRUCTION

COMPETITIVE SEALED BIDDING (IFB) for "HAWAII ARMY NATIONALGUARD B1788 BOILER ROOM IMPROVEMENTS, KALAELOA, OAHU, STATE OF HAWAII, DEPARTMENT OF DEFENSE, HAWAII ARMY NATIONAL GUARD, JOB NO. CA-202610-C" will be issued and awarded by the Department of Defense, Engineering Office via Hawai'i Electronic Procurement System (HIePRO). **All bids shall be submitted and uploaded through HIePRO prior to and no later than 2:00 P.M. HST on Thursday, SEPTEMBER 10, 2026**. The record of each Bidder and their respective proposal shall be open to public inspection by request for copies of bids. Late bids will not be accepted after the due date and time or received in any other form than electronically through HIePRO.

Proposed Scope of Work consists of, but not limited to: Removal and replacement of the domestic hot water system serving multiple buildings, including a new air-source heat pump water heater, five hot water storage tanks, a new water softener, and an expanded 12-panel solar hot water collector array with associated piping, pumps, and controls; new electrical service (transformer, circuit breaker, feeders, and branch circuits) to support the new mechanical equipment; and associated minor architectural and civil work, including concrete equipment pad repair and extension, roof membrane flashing at new penetrations, exterior painting, and a new sanitary sewer lateral.

The estimated cost is between $250,000 and $500,000.

A Site Visit/Pre-bid meeting will be held on TUESDAY, AUGUST 25, 2026 at 11:00 a.m. Park on the road shoulder across the entrance gate. Contractors are to meet Major Randall Duldulao or Allied Security Guard at the entrance gate. Please register through HIePRO or email Major Randall Duldulao at randall.s.duldulao@hawaii.gov and Cc jesper.h.andersen@hawaii.gov before 10:00 pm on Friday August 21, 2026, to register for the site visit. Provide your company information, attendees names, an email and a contract number, if you are intending to register for the site visit. All interested bidders and sub-contractors are welcome but not required to attend.

Bidders are advised that they should not wait until the last minute to submit their bid through HIePRO. Bidders are solely responsible for ensuring that their electronic submission through HIePRO is complete and all mandatory bid files are attached to their bid prior to the due date and time. The Engineering Office shall not be responsible for any delay or failure of any Bidder to submit any materials updated through the IFB process on a timely basis.

QUESTIONS AND REQUESTS FOR CLARIFICATION

Questions and Requests for Clarification regarding the Technical Specifications or any other aspect of the IFB must be submitted via HIePRO by **10:00 p.m. Thursday, August 27, 2026.** Responses are scheduled to be posted on **Friday, September 4, 2026**. The Department of Defense, Engineering Office shall not be required to answer Questions or Requests for Clarification not submitted via HIePRO or received after the Questions and Requests for Clarification deadline.

Bidders are responsible for checking for any addenda for this project. The addenda will be posted on the HIePRO listing and at the State Department of Defense website at http://dod.hawaii.gov/hieng/

All documents can be downloaded from HIePRO and at the State Department of Defense website at http://dod.hawaii.gov/hieng/.

REQUIREMENT FOR CONTRACTORS LICENSING CLASSIFICATIONS
Due to the nature of the work contemplated Bidder must possess a valid State of Hawai'i Contractor's license in the appropriate classification, which includes a Licensed Plumber and C-37 Contractor.

General Engineering Contractors holding an 'A' license and General Building Contractors holding a 'B' license are reminded that due to the Hawai'i Supreme Court's January 28, 2002 decision in Okada Trucking Co., Ltd. v. Board of Water Supply, et al., 97 Haw. 450 (2002), they are prohibited from undertaking any work, solely or as part of a larger project, which would require the General Contractor to act as a specialty Contractor in any area in which the General Contractor has no license.

Bidders are solely responsible to review the project requirements, determine the appropriate licenses required, and ensure that they possess and that the Subcontractor(s) listed in their OFFER FORM possess the necessary specialty licenses to perform the work for this project.

PROJECT LABOR AGREEMENT
A Project Labor Agreement (PLA) will be required for any construction project in excess of one million five hundred thousand dollars ($1,500,000).

The Contractor who is awarded the project shall be required to submit to the Department of Defense, Engineering a complete, fully executed Agreement-To-Be-Bound within fourteen (14) calendar days of project award, or as soon thereafter as is practicable as determined by the Department. The Contractor must also obtain Letters of Assent from each subcontractor of whatever tier who may be employed on the project and submit copies of such Letters to the Department of Defense, Engineering within fourteen (14) calendar days of project award, or as soon thereafter as is practicable as determined by the Department. The required form of the Contractor's Agreement To Be Bound and the subcontractors' Letter of Assent may be found in the solicitation packet. Failure to timely submit any required Agreement-To-Be-Bound or any required Letter of Assent shall be cause for the State in its sole discretion to rescind the subject award and to award the project to: the responsive and responsible offerer with the next lowest bid price for solicitations made under HRS 103D-302; or the next highest ranked offerer satisfying all solicitation requirements for solicitations made under HRS 103D-303.

OFFER DEEMED FIRM/AUTHORITY TO SUBMIT OFFER
Submission of an electronic response to the State of Hawai'i constitutes and shall be deemed an offer to sell the specified goods and/or services to the State of Hawai'i at the price shown in the response and under the State's Terms and Conditions. The electronic response submitter certifies that he/she is authorized to sign the response for the submitting vendor and that the response is made without connection with any person, firm, or corporation making a response for the same goods and/or services and is in all respects fair and without collusion or fraud.

CAMPAIGN CONTRIBUTIONS BY STATE AND COUNTY CONTRACTORS PROHIBITED
If awarded a contract in response to this solicitation, offeror agrees to comply with HRS §11-355, which states that campaign contributions are prohibited from a State and County government contractor during the term of the contract if the contractor is paid with funds appropriated by the legislative body between the execution of the contract through the completion of the contract.

HAWAI'I PRODUCTS' PREFERENCE
In accordance with ACT 174, SLH 2022, effective June 27, 2022, Hawai'i Products Preference shall not apply to solicitations for public works construction. Therefore, the Hawai'i Products Preference shall not apply to this project.

Stephen F. Logan
Major General
Adjutant General

Posted on: August 17, 2026

HAWAII ARMY NATIONAL GUARD
B1788 BOILER ROOM IMPROVEMENTS

BID SET: ISSUE FOR CONSTRUCTION

KALAELOA, OAHU, HAWAI'I
DEPARTMENT OF DEFENSE, STATE OF HAWAI'I
JOB NO. CA-202610-C

CONSULTANTS

ARCHITECT	MASON 119 MERCHANT STREET, SUITE 501 HONOLULU, HI 96813 (808) 536-0556
CIVIL	WAI'OLU GROUP LLC 615 PIIKOI STREET, SUITE 2003 HONOLULU, HI 96814 (808) 582-0478
ELECTRICAL PLUMBING, FIRE PROTECTION, MECHANICAL PHOTOVOLTAIC	INSYNERGY ENGINEERING, INC 1001 BISHOP STREET, SUITE 2500 HONOLULU, HAWAII 96813 (808) 521-3773

SHEET INDEX

SHEET REF NO	SHEET NO	TITLE	REV
GENERAL			
1	001	PROJECT DATA, LOCATION MAP, SITE PLAN & GENERAL NOTES	
CIVIL			
2	C001	CONSTRUCTION NOTES	
3	C002	ESCP NOTES	
4	C101	UTILITY PLAN	
5	C201	MISCELLANEOUS DETAILS	
ARCHITECTURE			
6	A-001	ABBREVIATIONS, LEGENDS AND GENERAL NOTES	
7	A-002	SPECIFICATIONS	
8	A-003	SPECIFICATIONS	
9	A-101	FLOOR AND ROOF PLAN	
10	A-501	DETAILS	
PLUMBING			
11	P-001	PLUMBING GENERAL NOTES AND LEGEND	
12	P-002	PLUMBING SITE PLAN	
13	P-101	PLUMBING PLAN - REMOVAL WORK	
14	P-102	PLUMBING PLAN - NEW WORK	
15	P-103	PLUMBING ROOF PLAN	
16	P-501	PLUMBING DETAILS	
17	P-601	PLUMBING SCHEDULES	
18	P-701	HOT WATER SCHEMATIC	
19	P-901	HOT WATER PIPING ISOMETRIC	
ELECTRICAL			
20	E-001	ELECTRICAL GENERAL NOTES AND SPECIFICATIONS	
21	E-002	BUILDING 1788 ELECTRICAL SYMBOL LIST & MOUNTING HEIGHT LIST	
22	E-003	ELECTRICAL SITE PLAN	
23	ED001	ELECTRICAL DEMOLITION PLAN	
24	E-101	ELECTRICAL FLOOR PLAN	
25	E-601	ELECTRICAL ONELINE DIAGRAMS	

LOCATION MAP

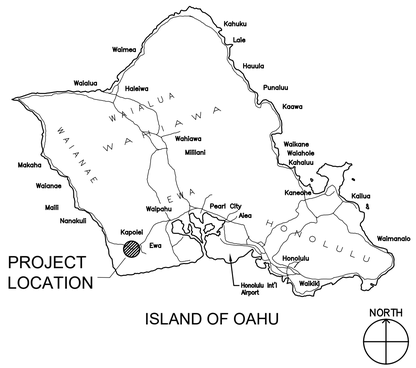

ISLAND OF OAHU

VICINITY PLAN

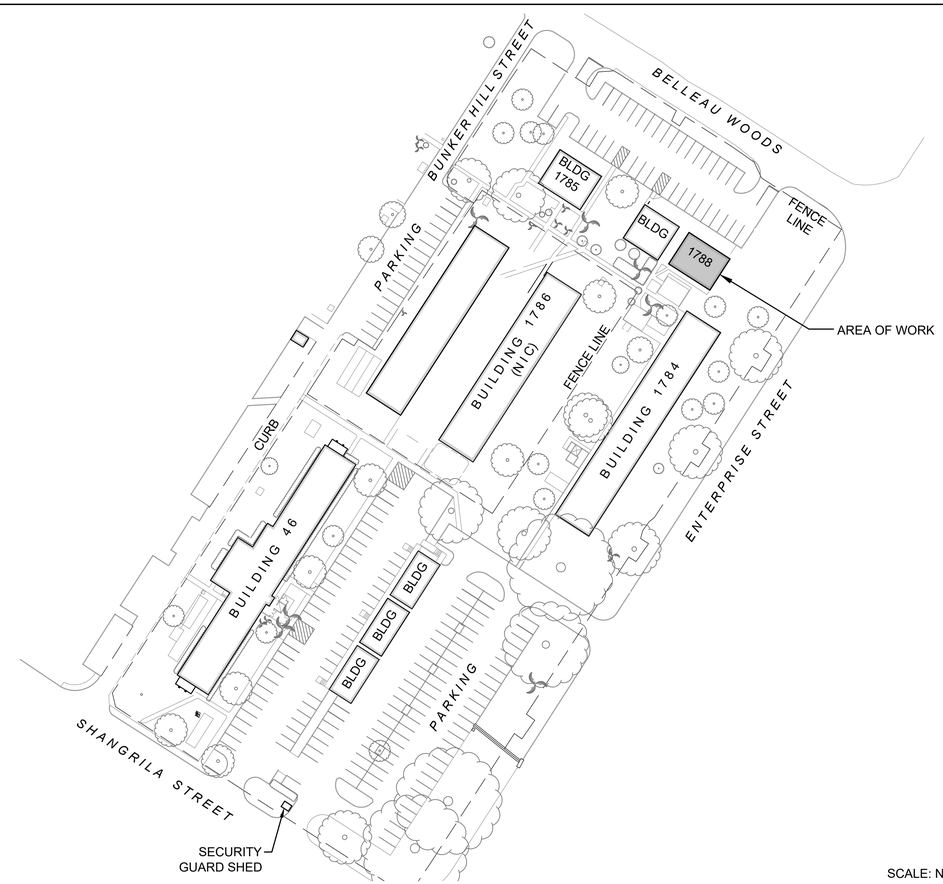

SCALE: NTS

GENERAL NOTES

1. COMPLY WITH THE LATEST CITY, STATE, AND FEDERAL LAWS, BUILDING CODES, THEIR ADDITIONS, ADDENDA, AND AMENDMENTS IN THE CONSTRUCTION OF THIS PROJECT.
2. REPAIR ALL DAMAGE CAUSED BY CONSTRUCTION OF THIS PROJECT.
3. USE DIMENSIONS NOTED ON DRAWINGS ONLY, DO NOT SCALE DIMENSIONS FROM THE DRAWINGS.

PROJECT DATA

DESCRIPTION :	BOILER ROOM IMPROVEMENTS
LOCATION :	91-1152 ENTERPRISE AVE KAPOLEI, HI 96707
TAX KEY MAP : LOT AREA :	9-1-013-050 5.93 ACRES
EXISTING BUILDING AREA :	BLDG 1788 APPROX 2,457 SQ. FT.

PROJECT SCOPE

THE PROJECT FOCUSES ON HOT WATER UPGRADES: REMOVAL AND REPLACEMENT OF HOT WATER TANKS, STORAGE TANKS, PIPING AND A SOLAR HOT WATER SYSTEM AND ELECTRICAL WORK.

REV NO.	SYM.	DESCRIPTION	SHT__ OF__	DATE	APPROVED: DOD ADMINISTRATOR

GLENN E. MASON
LICENSED PROFESSIONAL ARCHITECT
No. 4073
HAWAII, U.S.A.

This work was prepared by me or under my supervision, and construction of this project will be under my observation.

4/30/2028
Signature Expiration Date of the License

DEPARTMENT OF DEFENSE
STATE OF HAWAII

HAWAII ARMY NATIONAL GUARD
B1788 BOILER ROOM IMPROVEMENTS

KALAELOA, OAHU, HAWAII

BUILDING 1788
PROJECT DATA, LOCATION MAP, SITE PLAN & GENERAL NOTES

MASON		JOB NO.	DRAWING NO.
DESIGNED BY: AA	CHECKED BY: GM	CA–202610–C	001
DRAWN BY: PD, EC	APPROVED BY: GM	DATE	SHEET
SCALE: AS NOTED		AUG 2026	1 OF 25 SHEETS

FILE_____ DRAWER_____ FOLDER_____

CONSTRUCTION NOTES

1. ALL APPLICABLE CONSTRUCTION WORK SHALL BE DONE IN ACCORDANCE WITH THE STANDARD SPECIFICATIONS FOR PUBLIC WORKS CONSTRUCTION, SEPTEMBER 1986 AND STANDARD DETAILS FOR PUBLIC WORKS CONSTRUCTION, SEPTEMBER 1984, AS AMENDED, OF THE DEPARTMENT OF PUBLIC WORKS, CITY AND COUNTY OF HONOLULU AND THE COUNTIES OF KAUAI, MAUI, AND HAWAII.

2. THE UNDERGROUND PIPES, CABLES OR DUCTLINES KNOWN TO EXIST BY THE ENGINEER FROM HIS SEARCH OF RECORDS ARE INDICATED ON THE PLANS. THE CONTRACTOR SHALL VERIFY THE LOCATIONS AND DEPTHS OF THE FACILITIES AND EXERCISE PROPER CARE IN EXCAVATING IN THE AREA. WHEREVER CONNECTIONS OF NEW UTILITIES TO EXISTING UTILITIES ARE SHOWN ON THE PLANS, THE CONTRACTOR SHALL EXPOSE THE EXISTING LINES AT THE PROPOSED CONNECTIONS TO VERIFY THEIR LOCATIONS AND DEPTHS PRIOR TO EXCAVATION FOR THE NEW LINES.

3. NO CONTRACTOR SHALL PERFORM ANY CONSTRUCTION OPERATION SO AS TO CAUSE FALLING ROCKS, SOIL OR DEBRIS IN ANY FORM TO FALL, SLIDE OR FLOW INTO EXISTING CITY DRAINAGE SYSTEMS, OR ADJOINING PROPERTIES, STREETS OR NATURAL WATERCOURSES. SHOULD SUCH VIOLATIONS OCCUR, THE CONTRACTOR MAY BE CITED AND THE CONTRACTOR SHALL IMMEDIATELY MAKE ALL REMEDIAL ACTIONS NECESSARY.

4. THE GENERAL CONTRACTOR/DEVELOPER/OWNER OF THE PROJECT SHALL BE RESPONSIBLE FOR CONFORMANCE WITH APPLICABLE PROVISIONS OF THE HAWAII ADMINISTRATIVE RULES, TITLE 11, CHAPTER 54, "WATER QUALITY STANDARDS," AND TITLE 11, CHAPTER 55, "WATER POLLUTION CONTROL", AS WELL AS CHAPTER 18A OF THE REVISED ORDINANCES OF HONOLULU, AS AMENDED. BEST MANAGEMENT PRACTICES SHALL BE EMPLOYED AT ALL TIMES DURING CONSTRUCTION.

   THE GENERAL CONTRACTOR/DEVELOPER/OWNER OF THE PROJECT SHALL OBTAIN NATIONAL POLLUTANT DISCHARGE ELIMINATION SYSTEM (NPDES) PERMIT COVERAGE(S) FOR THE FOLLOWING:

   A. STORM WATER DISCHARGES ASSOCIATED WITH CONSTRUCTION ACTIVITIES THAT DISTURB ONE (1) ACRE OR MORE, AND
   B. DISCHARGES OF HYDROTESTING EFFLUENT, DEWATERING EFFLUENT, AND WELL DRILLING EFFLUENT TO STATE WATERS.

   IN ACCORDANCE WITH STATE LAW, ALL DISCHARGES RELATED TO PROJECT CONSTRUCTION OR OPERATIONS ARE REQUIRED TO COMPLY WITH STATE WATER QUALITY STANDARDS (HAWAII ADMINISTRATIVE RULES, CHAPTER 11-54). BEST MANAGEMENT PRACTICES SHALL BE USED TO MINIMIZE OR PREVENT THE DISCHARGE OF SEDIMENT, DEBRIS, AND OTHER POLLUTANTS TO STATE WATERS. PERMIT COVERAGE IS AVAILABLE FROM THE DEPARTMENT OF HEALTH, CLEAN WATER BRANCH AT HTTP://HEALTH.HAWAII.GOV/CWB. THE OWNER/DEVELOPER/CONTRACTOR IS RESPONSIBLE FOR OBTAINING OTHER FEDERAL, STATE, OR LOCAL AUTHORIZATIONS AS REQUIRED BY LAW.

5. CONFINED SPACE

   FOR ENTRY BY CITY PERSONNEL, INCLUDING INSPECTORS, INTO A PERMIT REQUIRED CONFINED SPACE AS DEFINED IN 29 CFR PART 1910.146(B), THE CONTRACTOR SHALL BE RESPONSIBLE FOR PROVIDING:
   I. ALL SAFETY EQUIPMENT REQUIRED BY THE CONFINED SPACE REGULATIONS APPLICABLE TO ALL PARTIES OTHER THAN THE CONSTRUCTION INDUSTRY, TO INCLUDE, BUT NOT LIMITED TO, THE FOLLOWING:
      a. FULL BODY HARNESSES FOR UP TO TWO PERSONNEL.
      b. LIFELINE AND ASSOCIATED CLIPS.
      c. INGRESS/EGRESS AND FALL PROTECTION EQUIPMENT.
      d. TWO-WAY RADIOS (WALKIE-TALKIES) IF OUT OF LINE-OF-SIGHT. E. EMERGENCY (ESCAPE) RESPIRATOR (10 MINUTE DURATION). F. CELLULAR TELEPHONE TO CALL FOR EMERGENCY ASSISTANCE.
      e. CONTINUOUS GAS DETECTOR (CALIBRATED) TO MEASURE OXYGEN, HYDROGEN SULFIDE, CARBON MONOXIDE AND FLAMMABLES (CAPABLE OF MONITORING AT A DISTANCE AT LEAST 20-FEET AWAY).
      f. PERSONAL MULTI-GAS DETECTOR TO BE CARRIED BY INSPECTOR.

   II. CONTINUOUS FORCED AIR VENTILATION ADEQUATE TO PROVIDE SAFE ENTRY CONDITIONS.
   III. ONE ATTENDANT/RESCUE PERSONNEL TOPSIDE (TWO, IF CONDITIONS WARRANT IT).

6. PURSUANT TO CHAPTER 6E, HRS, IN THE EVENT ANY ARTIFACTS OR HUMAN REMAINS ARE UNCOVERED DURING CONSTRUCTION OPERATIONS, THE CONTRACTOR SHALL IMMEDIATELY SUSPEND WORK AND NOTIFY THE HONOLULU POLICE DEPARTMENT, THE STATE DEPARTMENT OF LAND AND NATURAL RESOURCES-HISTORIC PRESERVATION DIVISION (692-8015). IN ADDITION, FOR NON-CITY PROJECTS, THE CONTRACTOR SHALL INFORM THE CIVIL ENGINEERING BRANCH, DEPARTMENT OF PLANNING AND PERMITTING (768-8084); AND FOR CITY PROJECTS, NOTIFY THE RESPONSIBLE CITY AGENCY.

SEWER NOTES

1. ALL SEWER CONSTRUCTION SHALL BE PERFORMED IN ACCORDANCE WITH THE CITY'S "STANDARD SPECIFICATIONS," SEPT. 1986, THE DEPARTMENT OF ENVIRONMENTAL SERVICES "WASTEWATER SYSTEM DESIGN STANDARDS," JULY 2017, AND "WASTEWATER SYSTEM STANDARD DETAILS," JULY 2017, CURRENT CITY PRACTICES AND REVISED ORDINANCES OF HONOLULU, 1990 AS AMENEDED.

2. THE UNDERGROUND PIPES, CABLES OR DUCTLINES KNOWN TO EXIST BY THE ENGINEER FROM HIS RESEARCH OF RECORDS ARE INDICATED ON THE PLANS. THE CONTRACTOR SHALL VERIFY THE LOCATION AND DEPTH OF THE FACILITIES, INCLUDING AND AFFECTING SEWER LINES, IN THE PRESENCE OF THE WASTEWATER INSPECTOR AND EXERCISE PROPER CARE IN EXCAVATING THE AREA. THE CONTRACTOR SHALL BE RESPONSIBLE AND SHALL PAY FOR ALL DAMAGED UTILITIES.

3. SEWER LATERALS SHALL BE CLEAR OF AND NOT CONFLICTING WITH ANY OTHER UTILITY. MINIMUM HORIZONTAL AND VERTICAL CLEARANCES SHALL BE STRICTLY OBSERVED AND FOLLOWED.

4. SLOPE FOR SEWER LATERALS SHALL BE A MINIMUM OF 2.00%.

5. BUILDING PLUMBING FACILITIES SHALL BE CONTROLLED BY SEWER LATERAL INVERTS.

6. THE CONTRACTOR SHALL BE RESPONSIBLE FOR MAINTAINING CONTINUOUS SEWER SERVICE TO ALL AFFECTED AREAS DURING CONSTRUCTION.

7. THE CONTRACTOR SHALL BE RESPONSIBLE FOR ANY SEWAGE SPILLS CAUSED DURING CONSTRUCTION. THE CONTRACTOR SHALL NOTIFY THE STATE DEPARTMENT OF HEALTH AND UTILIZE APPROPRIATE SAMPLING AND ANALYZING PROCEDURES. THE CONTRACTOR SHALL BE RESPONSIBLE FOR ALL PUBLIC NOTIFICATIONS AND PRESS RELEASES.

8. CONFINED SPACE

   FOR ENTRY BY CITY PERSONNEL, INCLUDING INSPECTORS, INTO A PERMIT-REQUIRED CONFINED SPACE AS DEFINED IN 29 CFR PART 1910.146(B), THE CONTRACTOR SHALL BE RESPONSIBLE FOR PROVIDING:

   A. ALL SAFETY EQUIPMENT REQUIRED BY THE CONFINED SPACE REGULATIONS APPLICABLE TO ALL PARTIES OTHER THAN THE CONSTRUCTION INDUSTRY, TO INCLUDE, BUT NOT LIMITED TO, THE FOLLOWING:
      a. FULL BODY HARNESSES FOR UP TO TWO PERSONNEL.
      b. LIFELINE AND ASSOCIATED CLIPS.
      c. INGRESS/EGRESS AND FALL PROTECTION EQUIPMENT.
      d. TWO-WAY RADIOS (WALKIE-TALKIES) IF OUT OF LINE-OF-SIGHT.
      e. EMERGENCY (ESCAPE) RESPIRATOR (10 MINUTE DURATION).
      f. CELLULAR TELEPHONE TO CALL FOR EMERGENCY ASSISTANCE.
      g. CONTINUOUS GAS DETECTOR (CALIBRATED) TO MEASURE OXYGEN, HYDROGEN SULFIDE, CARBON MONOXIDE AND FLAMMABLES (CAPABLE OF MONITORING AT A DISTANCE AT LEAST 20-FEET AWAY),
      h. PERSONAL MULTI-GAS DETECTOR TO BE CARRIED BY INSPECTOR.

   B. CONTINUOUS FORCED AIR VENTILATION ADEQUATE TO PROVIDE SAFE ENTRY CONDITIONS.

   C. ONE ATTENDANT/RESCUE PERSONNEL TOPSIDE (TWO, IF CONDITIONS WARRANT IT).

9. WHEN CONNECTING TO A LIVE SEWER LINE, THE CONTRACTOR SHALL ABIDE BY ALL CONDITIONS THAT THE STATE DEPARTMENT OF HEALTH SETS FORTH TO MITIGATE ANY WASTEWATER SPILL THAT MAY OCCUR. THE CONTRACTOR SHALL INFORM THE CITY INSPECTOR FIVE (5) WORKING DAYS PRIOR TO THE ACTUAL CONNECTION. THE CONTRACTOR SHALL BE RESPONSIBLE FOR ANY FINES AND PENALTIES DUE TO ANY SPILLS RESULTING FROM THE CONNECTION.

10. THE CONTRACTOR SHALL MAINTAIN VISIBILITY AND MAINTENANCE ACCESS TO LIVE SEWER MANHOLE LOCATIONS AT ALL TIMES, INCLUDING DURING NON-WORK HOURS AND PAVING OPERATIONS.

PUBLIC HEALTH SAFETY & CONVENIENCE NOTES

1. THE CONTRACTOR SHALL OBSERVE AND COMPLY WITH ALL FEDERAL, STATE, AND LOCAL LAWS REQUIRED FOR THE PROTECTION OF THE PUBLIC HEALTH AND SAFETY AND ENVIRONMENTAL QUALITY.

2. THE CONTRACTOR AT THEIR OWN EXPENSE SHALL KEEP THE PROJECT AND ITS SURROUNDING AREAS FREE FROM DUST NUISANCE. THE WORK SHALL BE IN CONFORMANCE WITH THE AIR POLLUTION CONTROL STANDARDS AND REGULATIONS OF THE STATE DEPARTMENT OF HEALTH.

3. NO CONTRACTOR SHALL PERFORM ANY CONSTRUCTION ACTIVITY SO AS TO CAUSE FALLING ROCK, SOIL OR DEBRIS IN ANY FORM TO FALL, SLIDE OR FLOW ONTO ADJOINING PROPERTIES, STREETS OR NATURAL WATERCOURSES. SHOULD SUCH VIOLATIONS OCCUR, THE CONTRACTOR SHALL IMMEDIATELY MAKE ALL REMEDIAL ACTIONS NECESSARY.

4. THE CONTRACTOR SHALL PROVIDE, INSTALL AND MAINTAIN ALL NECESSARY SIGNS, LIGHTS, FLARES, BARRICADES, MARKERS, CONES AND OTHER PROTECTIVE FACILITIES AND SHALL TAKE ALL NECESSARY PRECAUTIONS FOR THE PROTECTION, CONVENIENCE AND SAFETY OF THE PUBLIC. THE CONTRACTOR SHALL APPLY FOR A CONSTRUCTION PERMIT WITH A NOISE POLLUTION CONTROL PLAN.

ABBREVIATIONS:

@	AT
&	AND
AC	ASPHALTIC CONCRETE
ADA	AMERICANS WITH DISABILITIES ACT
ADAAG	AMERICANS WITH DISABILITIES ACT ACCESSIBILITY GUIDELINES
APPROX	APPROXIMATE, APPROXIMATELY
ASTM	AMERICAN SOCIETY FOR TESTING MATERIALS
B, BOT	BOTTOM
BC	BOTTOM OF CURB, BEGIN CURVE
BLDG	BUILDING
℄	CENTERLINE
CB	CATCH BASIN
CCH	CITY AND COUNTY OF HONOLULU
CFS	CUBIC FEET PER SECOND
CI	CAST IRON
CIP	CAST IN PLACE
CL	CLASS
CLR	CLEAR
CO	CLEAN OUT
CONC	CONCRETE
CONN	CONNECT, CONNECTION
CONT	CONTINUE, CONTINUOUS
COTG	CLEAN OUT TO GRADE
CY	CUBIC YARD
D	DRAIN
DET	DETAIL
DIA	DIAMETER
DI	DRAIN INLET, DUCTILE IRON
DMH	DRAIN MANHOLE
DPP	DEPARTMENT OF PLANNING & PERMITTING
DPW	DEPARTMENT OF PUBLIC WORKS
DWG	DRAWING
E	EAST, EASTING
EA	EACH
EJ	EXPANSION JOINT
ELEC	ELECTRIC, ELECTRICAL
ELEV, EL	ELEVATION
EP	EDGE OF PAVEMENT
EQ	EQUAL
ESCP	EROSION AND SEDIMENT CONTROL PLAN
EW	EACH WAY
EXIST, EX	EXISTING
FDC	FIRE DEPARTMENT CONNECTION
FFE	FINISH FLOOR ELEVATION
FG	FINISH GRADE
FH	FIRE HYDRANT
FL	FIRE LINE
FT	FOOT, FEET
G	GROUND
GALV	GALVANIZED
GPM	GALLONS PER MINUTE
GV	GATE VALVE
HORIZ	HORIZONTAL
HDPE	HIGH-DENSITY POLYETHYLENE
ID	INSIDE DIAMETER
INV	INVERT

L	LENGTH
LAT	LATERAL
LC	LENGTH OF CURVE
LF	LINEAR FOOT
LIN	LINEAR
LB(S)	POUND(S)
MAX	MAXIMUM
MA	MATCH
MECH	MECHANICAL
MH	MANHOLE
MISC	MISCELLANEOUS
MIN	MINIMUM
N	NORTH
NTS	NOT TO SCALE
NO	NUMBER
O/S	OFFSET
OC	ON CENTER
OD	OUTSIDE DIAMETER
PAV'T	PAVEMENT
PCC	PORTLAND CEMENT CONCRETE
PL	PROPERTY LINE, PLACE
PP	POWER POLE
PSI	POUNDS PER SQUARE INCH
PSF	POUNDS PER SQUARE FOOT
PVC	POLYVINYL CHLORIDE
R	RADIUS
REINF	REINFORCEMENT
REQ'D	REQUIRED
REV	REVISION/REVISED
ROW	RIGHT OF WAY
S	SOUTH, SLOPE, SEWER
SCH	SCHEDULE
SD	STORM DRAIN
SF	SQUARE FOOT
SHT	SHEET
SL	SEWER LINE
SMH	SEWER MANHOLE
SPEC	SPECIFICATION
SQ	SQUARE
SS	SANITARY SEWER
SST	STAINLESS STEEL
ST	STREET
STA	STATION
STD	STANDARD
S	SIDEWALK
SY	SQUARE YARD
T	TOP
THK	THICK
TYP	TYPICAL
VB	VALVE BOX
VCP	VITRIFIED CLAY PIPE
VERT	VERTICAL
W	WATER, WEST
W/	WITH
WL	WATERLINE
WMH	WATER MANHOLE
WM	WATER METER
WQV	WATER QUALITY VOLUME
WV	WATER VALVE
WWF	WELDED WIRE FABRIC
WWS	WASTEWATER SYSTEM

REV NO.	SYM.	DESCRIPTION	SHT__ OF__	DATE	APPROVED: DOD ADMINISTRATOR

CHAD M. MCDONALD
LICENSED PROFESSIONAL ENGINEER
No. 9793-C
HAWAII, U.S.A.

This work was prepared by me or under my supervision, and construction of this project will be under my observation.

Signature 4/30/2028 Expiration Date of the License

DEPARTMENT OF DEFENSE
STATE OF HAWAII

HAWAII ARMY NATIONAL GUARD
B1788 BOILER ROOM IMPROVEMENTS

KALAELOA, OAHU, HAWAII

BUILDING 1788
CONSTRUCTION NOTES

MASON

DESIGNED BY:	CHECKED BY:	JOB NO.	DRAWING NO.
SS	CM	CA-202610-C	C001
DRAWN BY: CADD	APPROVED BY: CM	DATE	SHEET
SCALE: AS NOTED		AUG 2026	2 OF 25 SHEETS

FILE_____ DRAWER_____ FOLDER_____

EROSION PREVENTION/ SEDIMENT CONTROL NOTES:

1. THE CONTRACTOR SHALL FOLLOW THE GUIDELINES IN THE CITY AND COUNTY OF HONOLULU'S "RULES RELATING TO WATER QUALITY".

2. MEASURES TO CONTROL EROSION AND OTHER POLLUTANTS SHALL BE IN PLACE BEFORE ANY EARTHWORK IS INITIATED.

3. TEMPORARY STABILIZATION

   TEMPORARY STABILIZATION IS REQUIRED ON DISTURBED AREAS WHICH ARE AT FINAL GRADE OR WHEN THE DISTURBED AREA WILL NOT BE WORKED FOR 7 CONSECUTIVE DAYS OR MORE. TEMPORARY STABILIZATION MAY BE ACHIEVED USING SEED AND MULCHING FOR SLOPES LESS THAN 5% AND EITHER RIP-RAP OR SOD FOR SLOPES IN EXCESS OF 5%.

4. PERMANENT STABILIZATION

   ALL DISTURBED AREAS SHALL BE PERMANENTLY STABILIZED USING VEGETATIVE COVERING, PAVEMENT, OR EQUIVALENT, PRIOR TO REMOVING EROSION AND SEDIMENT MEASURES. TRAPPED SEDIMENT AND AREAS OF DISTURBED SOIL WHICH RESULT FROM THE REMOVAL OF THE TEMPORARY MEASURES SHALL BE IMMEDIATELY AND PERMANENTLY STABILIZED.

5. PRESERVE EXISTING VEGETATION.

   CLEARLY MARK THE AREAS TO BE PRESERVED WITH FLAGS OR TEMPORARY FENCING. WHERE TEMPORARY FENCING IS USED, FENCING MUST BE ADEQUATELY SUPPORTED BY POSTS AND MAINTAINED IN AN UPRIGHT POSITION.

6. PERIMETER CONTROLS

   PERIMETER CONTROLS ARE REQUIRED DOWN SLOPE OF ALL DISTURBED AREAS. MAINTAIN DOWNSTREAM VEGETATED BUFFER AREA.

7. TRACKING CONTROL

   - MINIMIZE SEDIMENT TRACK-OUT ONTO OFF-SITE STREETS, OTHER PAVED AREAS, AND SIDEWALKS FROM VEHICLES EXITING THE CONSTRUCTION SITE BY RESTRICTING VEHICLE TRAFFIC TO PROPERLY DESIGNATED AREAS AND USING ADDITIONAL CONTROLS TO REMOVE SEDIMENT FROM VEHICLE TIRES PRIOR TO EXITING THE SITE.
   - VEHICULAR PARKING AND MOVEMENT ON PROJECT SITES MUST BE CONFINED TO PAVED SURFACES OR PREDEFINED PARKING AREAS AND VEHICLE PATHS, WHICH SHALL BE MARKED WITH FLAGS OR BOUNDARY FENCING.
   - ALL POLLUTANTS AND MATERIALS THAT ARE DROPPED, WASHED, TRACKED, SPILLED, OR OTHERWISE DISCHARGED FROM A PROJECT SITE TO OFF-SITE STREETS, OTHER PAVED AREAS, SIDEWALKS OR THE MS4 MUST BE CLEANED USING DRY METHODS SUCH AS SWEEPING OR VACUUMING.
   - WASHING POLLUTANTS AND MATERIALS THAT ARE DISCHARGED FROM THE PROJECT SITE TO THE MS4 INTO DRAIN INLETS OR CATCH BASINS IS PROHIBITED UNLESS THE MATERIAL IS SEDIMENT AND THE INLETS ARE DIRECTED TO A SEDIMENT BASIN OR SEDIMENT TRAP.

8. BEST MANAGEMENT PRACTICES (BMPS) SHALL NOT BE REMOVED UNTIL FINAL STABILIZATION IS COMPLETE FOR THAT PHASE.

9. REFER TO CITY AND COUNTY OF HONOLULU BEST MANAGEMENT PRACTICES MANUAL - CONSTRUCTION, FOR MORE INFORMATION ON BMPS.

GOOD HOUSEKEEPING BMPs:

1. STREET SWEEPING AND VACUUMING

   ALL POLLUTANTS DISCHARGED FROM CONSTRUCTION SITE TO OFF-SITE AREAS MUST BE SWEPT OR VACUUMED EACH DAY BEFORE LEAVING THE JOB SITE.

2. MATERIALS DELIVERY, STORAGE AND USE MANAGEMENT

   PREVENT, REDUCE OR ELIMINATE THE DISCHARGE OF POLLUTANTS FROM MATERIAL DELIVERY, STORAGE AND USE TO THE STORM WATER SYSTEM OR WATERCOURSES BY MINIMIZING THE STORAGE OF HAZARDOUS MATERIALS ONSITE, STORING MATERIALS IN A DESIGNATED AREA, INSTALLING SECONDARY CONTAINMENT. CONSTRUCTION MATERIALS, WASTE, TOXIC AND HAZARDOUS SUBSTANCES, STOCKPILES AND OTHER SOURCES OF POLLUTION SHALL NOT BE STORED IN BUFFER AREAS, NEAR AREAS OF CONCENTRATED FLOW, OR AREAS ABUTTING THE MS4, RECEIVING WATERS, OR DRAINAGE IMPROVEMENTS THAT DISCHARGE OFF-SITE. PRIMARY AND SECONDARY CONTAINMENT CONTROLS AND COVERS SHALL BE IMPLEMENTED TO THE MEP.

3. SPILL PREVENTION AND CONTROL.

   CREATE AND IMPLEMENT SPILL PREVENTION AND RESPONSE PLANS TO ELIMINATE AND MINIMIZE THE DISCHARGE OF POLLUTANTS TO THE MS4 AND RECEIVING WATERS FROM LEAKS AND SPILLS BY REDUCING THE CHANCE FOR SPILLS, ABSORBING, CONTAINING AND CLEANING UP SPILLS AND PROPERLY DISPOSING OF SPILL MATERIALS. AT A MINIMUM, ALL PROJECTS SHALL CLEANUP ALL LEAKS AND SPILLS IMMEDIATELY.

4. HAZARDOUS MATERIALS

   PREVENT OR REDUCE THE DISCHARGE OF POLLUTANTS TO STORM WATER FROM HAZARDOUS WASTE THROUGH PROPER MATERIAL USE AND WASTE DISPOSAL IN THE EVENT THAT HAZARDOUS MATERIALS ARE DISCHARGED TO THE MS4. THE PROPERTY OWNER OR ESCP COORDINATOR SHALL IMMEDIATELY NOTIFY THE DEPARTMENT OF FACILITY MAINTENANCE, HONOLULU FIRE DEPARTMENT, AND HONOLULU POLICE DEPARTMENT OF THE DISCHARGE BY TELEPHONE. A WRITTEN REPORT DESCRIBING THE POLLUTANTS THAT WERE DISCHARGED, THE REASONS FOR THE DISCHARGE, AND THE MEASURES THAT HAVE BEEN TAKEN OR WILL BE TAKEN TO PREVENT A REOCCURRENCE OF THE DISCHARGE SHALL BE SUBMITTED TO THE DIRECTOR NO LESS THAN 3 DAYS AFTER NOTIFICATION BY PHONE.

5. NONHAZARDOUS MATERIALS

   IN THE EVENT THAT NON HAZARDOUS MATERIALS ARE DISCHARGED TO THE MS4, THE PROPERTY OWNER OR ESCP COORDINATOR SHALL NOTIFY THE CITY DEPARTMENT OF FACILITIES MAINTENANCE BY TELEPHONE NO LATER THAN THE NEXT BUSINESS DAY. A WRITTEN REPORT DESCRIBING THE POLLUTANTS THAT WERE DISCHARGED, THE REASONS FOR THE DISCHARGE, AND THE MEASURES THAT HAVE BEEN TAKEN OR WILL BE TAKEN TO PREVENT A REOCCURRENCE OF THE DISCHARGE SHALL BE SUBMITTED TO THE DIRECTOR NO LESS THAN 3 DAYS AFTER NOTIFICATION BY PHONE.

6. VEHICLE AND EQUIPMENT CLEANING

   ELIMINATE AND MINIMIZE THE DISCHARGE OF POLLUTANTS TO STORM WATER FROM VEHICLE AND EQUIPMENT CLEANING OPERATIONS BY USING OFF-SITE FACILITIES WHEN FEASIBLE, WASHING IN DESIGNATED, CONTAINED AREAS ONLY, AND ELIMINATING DISCHARGES TO THE STORM DRAIN SYSTEM BY EVAPORATING AND/OR TREATING WASH WATER, AS APPROPRIATE OR INFILTRATING WASH WATER FOR EXTERIOR CLEANING ACTIVITIES THAT USE WATER ONLY.

7. VEHICLE AND EQUIPMENT FUELING

   PREVENT FUEL SPILLS AND LEAKS BY USING OFF-SITE FACILITIES, FUELING ONLY IN DESIGNATED AREAS, ENCLOSING OR COVERING STORED FUEL, AND IMPLEMENTING SPILL CONTROLS SUCH AS SECONDARY CONTAINMENT AND ACTIVE MEASURES USING SPILL RESPONSE KITS.

8. VEHICLE AND EQUIPMENT MAINTENANCE

   ELIMINATE AND MINIMIZE THE DISCHARGE OF POLLUTANTS TO STORM WATER FROM VEHICLE AND EQUIPMENT MAINTENANCE OPERATIONS BY USING OFF-SITE FACILITIES WHEN FEASIBLE, PERFORMING WORK IN DESIGNATED AREAS ONLY, USING SPILL PADS UNDER VEHICLES AND EQUIPMENT, CHECKING FOR LEAKS AND SPILLS, AND CONTAINING AND CLEANING UP SPILLS IMMEDIATELY.

9. SOLID WASTE MANAGEMENT

   PREVENT OR REDUCE DISCHARGE OF POLLUTANTS TO THE LAND, GROUNDWATER, AND IN STORM WATER FROM SOLID WASTE OR CONSTRUCTION AND DEMOLITION WASTE BY PROVIDING DESIGNATED WASTE COLLECTION AREAS, COLLECT SITE TRASH DAILY, AND ENSURING THAT CONSTRUCTION WASTE IS COLLECTED, REMOVED, AND DISPOSED OF ONLY AT AUTHORIZED DISPOSAL AREAS.

10. SANITARY/SEPTIC WASTE MANAGEMENT

    TEMPORARY AND PORTABLE SANITARY AND SEPTIC WASTE SYSTEMS SHALL BE MOUNTED OR STAKED IN, WELL-MAINTAINED AND SCHEDULED FOR REGULAR WASTE DISPOSAL AND SERVICING. SOURCES OF SANITARY AND/OR SEPTIC WASTE SHALL NOT BE STORED NEAR THE MS4 OR RECEIVING WATERS.

11. STOCKPILE MANAGEMENT

    STOCKPILES SHALL NOT BE LOCATED IN DRAINAGE WAYS, WITHIN 50 FEET FROM AREAS OF CONCENTRATED FLOWS, AND ARE NOT ALLOWED IN THE CITY RIGHT-OF-WAY. SEDIMENT BARRIERS OR SILT FENCES SHALL BE USED AROUND THE BASE OF ALL STOCKPILES. STOCKPILES SHALL NOT EXCEED 15 FEET IN HEIGHT. STOCKPILES GREATER THAN 15 FEET IN HEIGHT SHALL REQUIRE 8 FOOT WIDE BENCHING IN ACCORDANCE WITH ROH CHAPTER 18A, ARTICLE 3. STOCKPILES MUST BE COVERED WITH PLASTIC SHEETING OR A COMPARABLE MATERIAL IF THEY WILL NOT BE ACTIVELY USED WITHIN 7 DAYS.

12. LIQUID WASTE MANAGEMENT

    LIQUID WASTE SHALL BE CONTAINED IN A CONTROLLED AREA SUCH AS A HOLDING PIT, SEDIMENT BASIN , ROLL-OFF BIN, OR PORTABLE TANK OF SUFFICIENT VOLUME AND TO CONTAIN THE LIQUID WASTES GENERATED. CONTAINMENT AREAS OR DEVICES MUST BE IMPERMEABLE AND LEAK FREE AND SHOULD NOT BE LOCATED WHERE ACCIDENTAL RELEASE OF THE CONTAINED LIQUID CAN DISCHARGE TO WATER BODIES, CHANNELS, OR STORM DRAINS.

13. CONCRETE WASTE MANAGEMENT

    PREVENT OR REDUCE THE DISCHARGE OF POLLUTANTS TO STORM WATER FROM CONCRETE WASTE BY CONDUCTING WASHOUT OFFSITE OR PERFORMING ONSITE WASHOUT IN A DESIGNATED AREA CONSTRUCTED AND MAINTAINED IN SUFFICIENT QUANTITY AND SIZE TO CONTAIN ALL LIQUID AND CONCRETE WASTE GENERATED BY WASHOUT OPERATIONS. PLASTIC LINING MATERIAL CONTAINMENT AREAS OR DEVICES SHOULD NOT BE LOCATED WHERE ACCIDENTAL RELEASE OF THE CONTAINED LIQUID CAN DISCHARGE TO WATER BODIES, CHANNELS, OR STORM DRAINS. WASHOUT FACILITIES MUST BE CLEANED, OR NEW FACILITIES MUST BE CONSTRUCTED AND READY FOR USE ONCE THE WASHOUT IS 75 PERCENT FULL. ONCE CONCRETE WASTES ARE WASHED INTO THE DESIGNATED AREA AND ALLOWED TO HARDEN, THE CONCRETE SHOULD BE BROKEN UP, REMOVED, AND DISPOSED OF AS SOLID WASTES.

14. CONTAMINATED SOIL MANAGEMENT

    AT MINIMUM CONTAIN CONTAMINATED MATERIAL SOIL BY SURROUNDING WITH IMPERMEABLE LINED BERMS OR COVER EXPOSED CONTAMINATED MATERIAL WITH PLASTIC SHEETING. CONTAMINATED SOIL SHOULD BE DISPOSED OF PROPERLY IN ACCORDANCE WITH ALL APPLICABLE REGULATIONS.

15. DUST CONTROL.

    DUST FROM A PROJECT SITE SHALL NOT BE TRANSPORTED OR DISCHARGED TO OFF-SITE AREAS. THE WORK MUST BE IN CONFORMANCE WITH AIR POLLUTION CONTROL STANDARDS CONTAINED IN THE HAWAII ADMINISTRATIVE RULES: TITLE 11 CHAPTER 60.1 "AIR POLLUTION CONTROL. "ALL ESCPS SHALL PROVIDE FOR THE CONTROL OF DUST.

    - MULCHING TO A DEPTH OF NO LESS THAN 1 INCH.
    - SPRINKLING EXPOSED SOILS WITH WATER TO MAINTAIN MOISTNESS AT A DEPTH OF 2-3 INCHES DURING WORKING HOURS AND NOT TO GENERATE ANY RUNOFF.
    - VERTICAL DUST BARRIERS NO LESS THAN 6 FEET IN HEIGHT, CONSTRUCTED OF MATERIALS CAPABLE OF EFFECTIVELY PREVENTING THE SPREAD OF DUST PARTICLES.

16. BMP AND SITE MAINTENANCE

    ALL ESCP BMPS SHALL BE MAINTAINED THROUGHOUT THE DURATION OF THE PROJECT. ADDITIONAL BMPS SHALL BE IMPLEMENTED AS NECCESARY TO ADDRESS EROSION AND SEDIMENT CONTROL AT THE PROJECT SITE.

EROSION AND SEDIMENT CONTROL PLAN SCHEDULE AND RAIN RESPONSE PLAN:

PROJECT SEQUENCE:

1. INSTALL PERIMETER CONTROLS, CLEARING AND GRUBBING AS NECESSARY FOR THE INSTALLATION OF THESE BMPS.
2. CLEAR, GRUB AND GRADE THE SITE. RELOCATE, RECONSTRUCT AND MAINTAIN BMPS AS NEEDED TO KEEP THEM EFFECTIVE AT ALL TIMES. INITIATE TEMPORARY STABILIZATION IMMEDIATELY ONCE GRADING IS COMPLETED.
3. PROCEED WITH CONSTRUCTION WITH LEAST POSSIBLE DISTURBANCE OF VEGETATIVE AREAS AND TEMPORARY STRUCTURES.
4. PLANT PERMANENT GROUND COVER ACCORDING TO THE LANDSCAPING PLAN AS SOON AS POSSIBLE.
5. REMOVE OR DISMANTLE TEMPORARY EROSION CONTROL STRUCTURES AFTER FULL ESTABLISHMENT OF PERMANENT VEGETATIVE COVER.
6. PRACTICE GOOD HOUSEKEEPING MEASURES THROUGHOUT THE DURATION OF CONSTRUCTION.
7. INSPECTIONS WILL BE PERFORMED MONTHLY.

RAIN RESPONSE PLAN:

1. THE FOLLOWING WILL BE PERFORMED WHEN HEAVY RAINS, TROPICAL STORM OR HURRICANE IS IMMINENT OR IS FORECASTED IN THE NEXT 48 HOURS.
2. TEMPORARY SUSPENSION OF ACTIVE GRADING.
3. INSPECT ALL PERIMETER CONTROLS AND MAINTAIN AS NEEDED. REINSTALL ANY PERIMETER CONTROLS THAT WERE REMOVED DUE TO ACTIVE WORK IN THE AREA.
4. COVER OR RELOCATE MATERIAL STOCKPILES AND LIQUID CONTAINERS TO AVOID CONTACT WITH RAINWATER.
5. PLACE SPILL PANS OR OIL-ONLY SPILL PADS UNDER CONSTRUCTION VEHICLES TO PREVENT RUNOFF FROM CONTACTING ANY SPILLED PETROLEUM PRODUCTS. PROPERLY DISPOSE OF ANY ACCUMULATED OILY WATER AFTER THE RAIN EVENT.
6. RE-INSPECT AFTER THE APPROACHING HEAVY RAINS, TROPICAL STORM OR HURRICANE AND REPLACE OR MAINTAIN BMPS AS NEEDED.

REV NO.	SYM.	DESCRIPTION	SHT__ OF__	DATE	APPROVED: DOD ADMINISTRATOR

CHAD M. MCDONALD
LICENSED PROFESSIONAL ENGINEER
No. 9793-C
HAWAII, U.S.A.

This work was prepared by me or under my supervision, and construction of this project will be under my observation.

4/30/2028
Signature Expiration Date of the License

DEPARTMENT OF DEFENSE
STATE OF HAWAII

HAWAII ARMY NATIONAL GUARD
B1788 BOILER ROOM IMPROVEMENTS

KALAELOA, OAHU, HAWAII

BUILDING 1788
ESCP NOTES

MASON		JOB NO.	DRAWING NO.
DESIGNED BY: SS	CHECKED BY: CM	CA-202610-C	C002
DRAWN BY: CADD	APPROVED BY: CM	DATE	SHEET
SCALE: AS NOTED		AUG 2026	3 OF 25 SHEETS

FILE_____ DRAWER_____ FOLDER_____

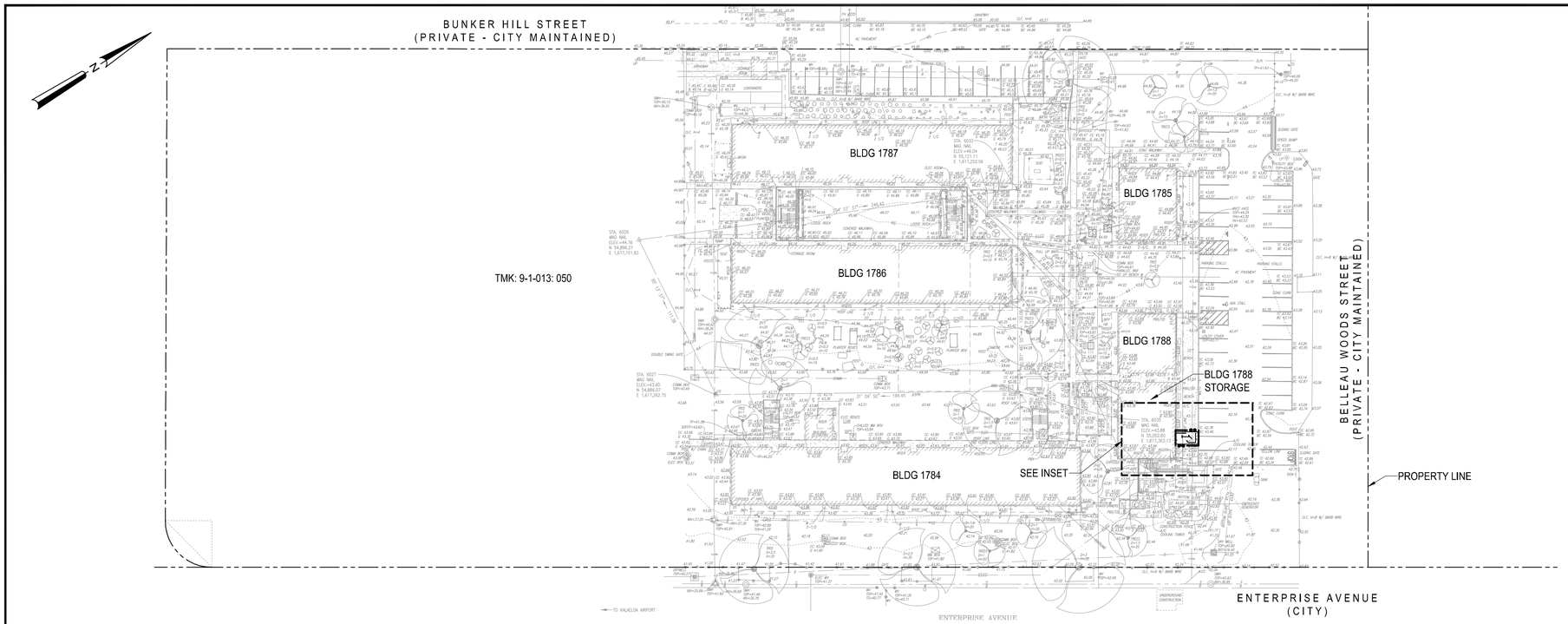

1 / C101 **UTILITY PLAN**
SCALE: 1" = 40'

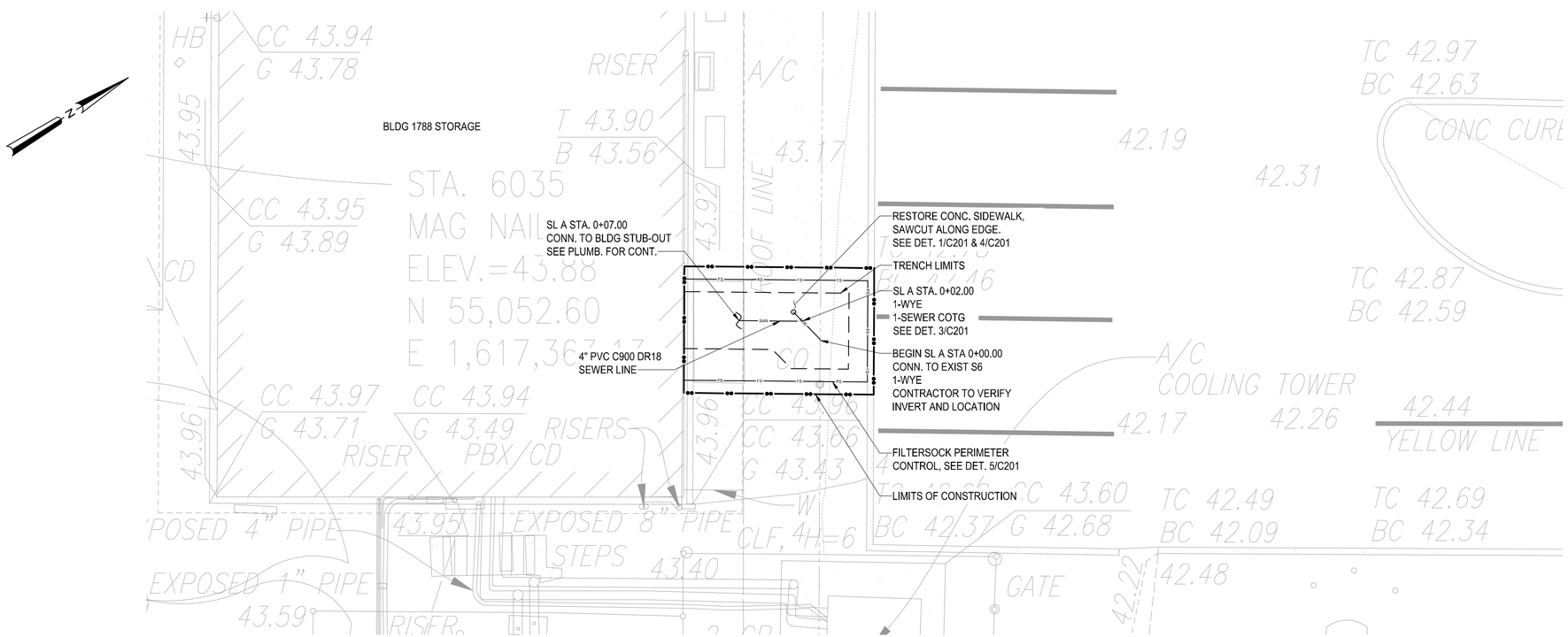

2 / C101 **INSET**
SCALE: 1" = 5'

LEGEND

- PROPERTY LINE
- LIMITS OF CONSTRUCTION
- TRENCH LIMITS
- SEWER LINE
- EXIST. SEWER LINE
- FILTERSOCK PERIMETER CONTROL

NOTES:

1. SEE SHT. C002 FOR ESCP NOTES.

PRE-CONSTRUCTION BMPs
- FILTER SOCK PERIMETER CONTROL

DURING CONSTRUCTION BMPs
- TEMPORARY STABILIZATION

POST-CONSTRUCTION BMPs
- PERMANENT STABILIZATION

GRAPHIC SCALE

1" = 40' — 40' 20' 0 40' 80'

1" = 5' — 5' 0 5' 10'

REV NO.	SYM.	DESCRIPTION	SHT__ OF__	DATE	APPROVED: DOD ADMINISTRATOR

CHAD M. MCDONALD — LICENSED PROFESSIONAL ENGINEER No. 9793-C — HAWAII, U.S.A.

This work was prepared by me or under my supervision, and construction of this project will be under my observation.

Signature — Expiration Date of the License: 4/30/2028

DEPARTMENT OF DEFENSE
STATE OF HAWAII

HAWAII ARMY NATIONAL GUARD
B1788 BOILER ROOM IMPROVEMENTS

KALAELOA, OAHU, HAWAII

BUILDING 1788
UTILITY PLAN

MASON		JOB NO.	DRAWING NO.
DESIGNED BY: SS	CHECKED BY: CM	CA-202610-C	C101
DRAWN BY: CADD	APPROVED BY: CM	DATE: AUG 2026	SHEET 4 OF 25 SHEETS
SCALE: AS NOTED			

FILE_____ DRAWER_____ FOLDER_____

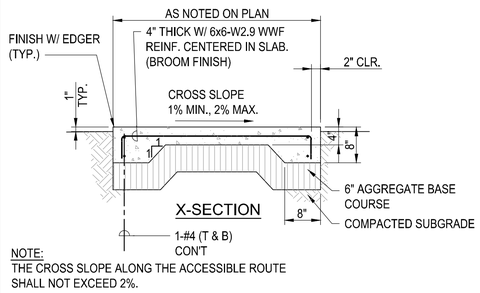

1 C201 CONCRETE WALKWAY DETAIL
SCALE: 3/4" = 1'-0"

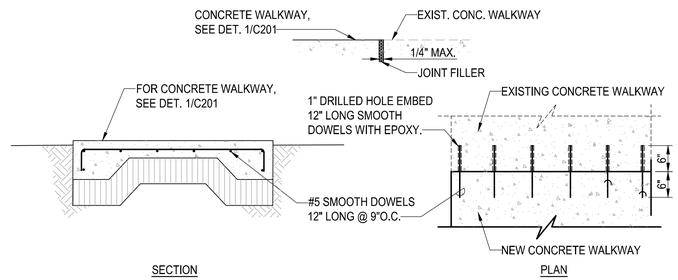

2 C201 CONNECTION TO EXIST. WALKWAY DETAIL
SCALE: 3/4" = 1'-0"

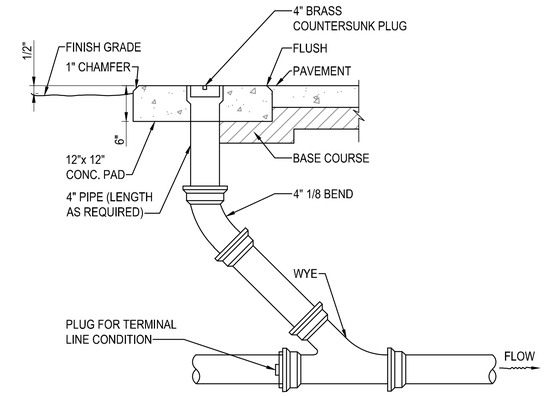

3 C201 4" SEWER CLEANOUT DETAIL
SCALE: 3/4" = 1'-0"

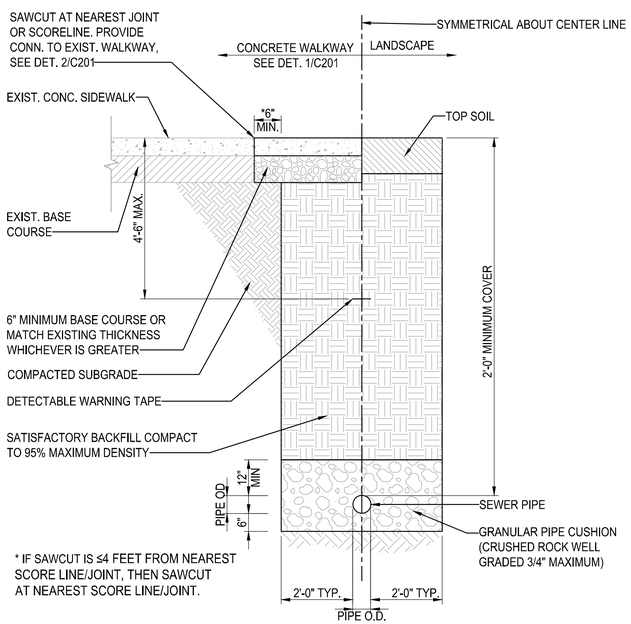

4 C201 TYPICAL SEWER TRENCH DETAIL
SCALE: 3/4" = 1'-0"

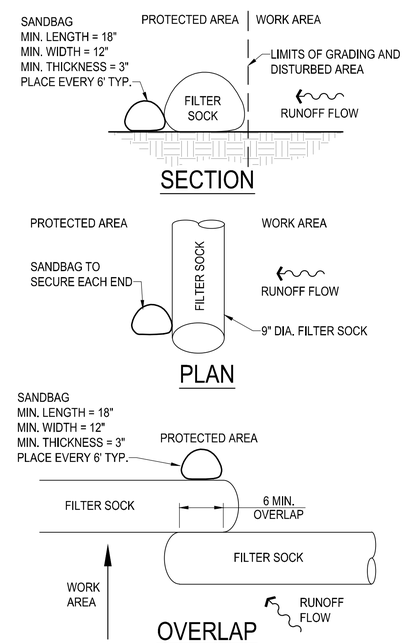

5 C201 FILTER SOCK DETAIL
NOT TO SCALE

GRAPHIC SCALE

3/4" = 1'-0" 0 1' 2' 3'

REV NO.	SYM.	DESCRIPTION	SHT__ OF__	DATE	APPROVED: DOD ADMINISTRATOR

CHAD M. MCDONALD
LICENSED PROFESSIONAL ENGINEER
No. 9793-C
HAWAII, U.S.A.

This work was prepared by me or under my supervision, and construction of this project will be under my observation.

Signature 4/30/2028 Expiration Date of the License

DEPARTMENT OF DEFENSE
STATE OF HAWAII

HAWAII ARMY NATIONAL GUARD
B1788 BOILER ROOM IMPROVEMENTS

KALAELOA, OAHU, HAWAII

BUILDING 1788
MISCELLANEOUS DETAILS

MASON		JOB NO.	DRAWING NO.
DESIGNED BY: SS	CHECKED BY: CM	CA-202610-C	C201
DRAWN BY: CADD	APPROVED BY: CM	DATE	SHEET
SCALE: AS NOTED		AUG 2026	5 OF 25 SHEETS

FILE_____ DRAWER_____ FOLDER_____

MATERIALS

- EXISTING EARTH
- FILL EARTH
- CONCRETE
- GRANULAR TERMITE BARRIER
- CAPILLARY WATER BARRIER
- CONCRETE MASONRY UNITS (PLAN)
- CONCRETE MASONRY UNITS (SECTION)
- CERAMIC TILE-AS INDICATED
- ACOUSTIC CEILING TILE
- GYPSUM WALL BOARD
- PLYWOOD
- RIGID INSULATION
- MINERAL FIBER INSULATION
- GLASS
- METAL STUD PARTITION
- WOOD (ROUGH)
- WOOD (FINISH)
- BLANKET INSULATION
- PERIMETER INSULATION
- METAL

ABBREVIATIONS

&	AND
@	AT
%	PERCENT
#	POUND OR NUMBER

A

AB	ANCHOR BOLT
ABV	ABOVE
A/C	AIR CONDITIONING
AC	ASPHALTIC CONCRETE
ACOUS	ACOUSTICAL
ADA	AMERICANS WITH DISABILTIES ACT
ADDM	ADDENDUM
ADJ	ADJUSTABLE, ADJACENT
AF	ACCESS FLOOR
AFF	ABOVE FINISH FLOOR
AFS	AUTOMATIC FIRE SPRINKLER
AGGR	AGGREGATE
ALUM	ALUMINUM
ALT	ALTERNATE
ANOD	ANODIZED
APPROX	APPROXIMATE
ARCH	ARCHITECT(URAL)
ASPH	ASPHALT
ATFP	ANTI-TERRORISM FORCE PROTECTION
AV	AVIATION

B

BB	BULLETIN BOARD
BD	BOARD
BLDG	BUILDING
BLKG	BLOCKING
BM	BEAM, BENCHMARK
Bn HQ	BATTALION HEADQUARTERS
BOT	BOTTOM

C

C	CHANNEL
CAB	CABINET
CB	CATCH BASIN
CBB	CEMENT BACKER BOARD
CF/CI	CONTRACTOR FURNISH/ CONTRACTOR INSTALL
CG	CORNER GUARD
CI	CAST IRON
CJ	CONTROL JOINT
CL	CENTERLINE
CLG	CEILING
CLIN	CLOTHESLINE
CLO	CLOSET
CLR	CLEAR
CMU	CONCRETE MASONRY UNIT(S)
CNTR	COUNTER
CO	CLEAN OUT
COF	COMPANY OPERATIONS FACILITY
COL	COLUMN
CONC	CONCRETE
COND	CONDITION
CONN	CONNECTION
CONSTR	CONSTRUCTION
CONT	CONTINUOUS
CONTR	CONTRACTOR
COORD	COORDINATE
COR	CONTRACTING OFFICER'S REPRESENTATIVE
CORR	CORRIDOR, CORRUGATED
CR	CURTAIN ROD
CPT	CARPET
CT	CERAMIC TILE
CTSK	COUNTERSUNK, (SINK)

D

D	DEEP, DEPTH
DA	DOUBLE ACTING
DBL	DOUBLE
DEFS	DIRECT-APPLIED EXTERIOR FINISH SYSTEM
DET	DETAIL
DF	DRINKING FOUNTAIN
DIA	DIAMETER
DIAG	DIAGONAL
DIG	DIGITAL
DIM	DIMENSION
DISP	DISPENSER
DIV	DIVISION
DN	DOWN
DX OUT	DUPLEX OUTLET
DR	DOOR
DS	DOWNSPOUT
DSP	DRY STANDPIPE
DW	DISHWASHER
DWG	DRAWING
DWR	DRAWER

E

EA	EACH
EHD	ELECTRIC HAND DRYER
EIFS	EXTERIOR INSULATION & FINISH SYSTEM
EJ	EXPANSION JOINT
EL	ELEVATION
ELEC	ELECTRICAL
ELEV	ELEVATOR
EMER	EMERGENCY
EMT	ELECTROMAGNETIC TUBING
EMW	ELASTOMERIC MEMBRANE WATERPROOFING
ENCL	ENCLOSURE
EPB	ELECTRICAL PANELBOARD
EQ	EQUAL
EQUIP	EQUIPMENT
EWC	ELECTRIC WATER COOLER
EWH	ELECTRIC WATER HEATER
EXH	EXHAUST
EXP	EXPANSION
EXIST	EXISTING
EXT	EXTERIOR
EXCON	EXERCISE CONTROL
EFS	EXTERIOR FINISH SYSTEM
EXH	EXHAUST
FA	FIRE ALARM, FRESH AIR
FDC	FIRE DEPT CONNECTION
FB	FLAT BAR
FCU	FAN COIL UNIT
FD	FLOOR DRAIN
FE	FIRE EXTINGUISHER
FEC	FIRE EXTINGUISHER CABINET
FFEL	FINISHED FLOOR ELEVATION
FHSMS	FLAT HEAD SHEET METAL SCREW
FIN	FINISH(ED)
FLASH	FLASHING
FLDG	FOLDING
FLG	FLOORING
FLR	FLOOR
FLUOR	FLUORESCENT
FOF	FACE OF FINISH
FOS	FACE OF STUD(S)
FP	FIREPROOFING
FR	FRAME
FRTW	FIRE RETARDANT TREATED WOOD
FT	FOOT, FEET
FTD	FACIAL TISSUE DISPENSER
FTG	FOOTING

G

G	GROUND
GA	GAGE
GALV	GALVANIZED
GB	GRAB BAR
GF/GI	GOVERNMENT INSTALLED
GL	GLASS
GLZ	GLAZING
GTB	GRANULAR TERMITE BARRIER
GWB	GYPSUM WALL BOARD
GYPBD	GYPSUM BOARD

H

H	HIGH
HB	HOSE BIBB
HC	HOLLOW CORE
HD	HEAVY DUTY
HDWD	HARDWOOD
HDW	HARDWARE
HM	HOLLOW METAL
HORIZ	HORIZONTAL
HP	HIGH POINT
HR	HOUR
HT	HEIGHT

I

IBC	INTERNATIONAL BUILDING CODE
ID	INSIDE DIAMETER/ DIMENSION
INCL	INCLUD(ED),(ING),(SIVE)
INF	INFANTRY
INSUL	INSULATION
INT	INTERIOR

J

JAN	JANITOR
JT	JOINT

K

KD	KNOCKED DOWN
KIT	KITCHEN
KO	KNOCKOUT

L

L	LENGTH, LONG, ANGLE
LAB	LABORATORY
LAM	LAMINATE
LAV	LAVATORY
LKR	LOCKER
LOG OPS	LOGISTICS AND OPERATIONS
LPT	LOW POINT
LT	LIGHT
L	LENGTH, LONG, ANGLE
LAB	LABORATORY
LAM	LAMINATE
LAV	LAVATORY
LKR	LOCKER
LOG OPS	LOGISTICS AND OPERATIONS
LPT	LOW POINT
LT	LIGHT

M

M	METER(S)
MAX	MAXIMUM
MB	MACHINE BOLT
MBD	MARKER BOARD
MTBD	MARKER/TACK BOARD
MC	MEDICINE CABINET
MECH	MECHANICAL
MEMB	MEMBRANE
MEP	MILITARY EQUIPMENT PARKING
MFR	MANUFACTURER
MIN	MINIMUM
MIRR	MIRROR
MISC	MISCELLANEOUS
MLDG	MOLDING
MM	MILLIMETER(S),
MO	MASONRY OPENING
MOD	MODIFIED
MR	MOP RACK
MR	MOISTURE RESISTANT
MT	MIRROR-TILT
MTD	MOUNTED
MTG	MOUNTING
MTL	METAL
MULL	MULLION
MW	MICROWAVE

N

N	NORTH
NFPA	NATIONAL FIRE PROTECTION ASSOCIATION
NIC	NOT IN CONTRACT
NL	NIGHT LIGHT
NO	NUMBER
NOM	NOMINAL
NPS	NOMINAL PIPE SIZE
NTS	NOT TO SCALE

O

OA	OVERALL
OC	ON CENTER
OD	OUTSIDE DIAMETER/ DIMENSION
OF/CI	OWNER FURNISHED-CONTRACTOR INSTALLED
OF/OI	OWNER FURNISHED-OWNER INSTALLED
OFF	OFFICE
OH	OVERHEAD
OHSC	OVERHEAD SERVICE CARRIER
OPNG	OPENING
OPP	OPPOSITE

P

PL	PROPERTY LINE
PLAM	PLASTIC LAMINATE
PLAS	PLASTER
PLBG	PLUMBING
PLYWD	PLYWOOD
PNL	PANEL
POV	PRIVATELY OWNED VEHICLE
PR	PAIR
PRCST	PRECAST
PROP	PROPERTY
PT	POINT
PTD	PAPER TOWEL DISPENSER
PTDWR	PAPER TOWEL DISPENSER AND WASTE RECEPTACLE
PTN	PARTITION
PTR	PAPER TOWEL RECPETACLE

Q

QT	QUARRY TILE

R

R	RISER, RADIUS
RA	ROOF ANCHOR
RB	REACH BACK
RCP	REFLECTED CEILING PLAN
RD	ROOF DRAIN
REF	REFERENCE, REFRIGERATOR
REFL	REFLECTED
REINF	REINFORCES, REINFORCING
REQD	REQUIRED
RESIL	RESILIENT
RH	ROBE HOOK
RM	ROOM
RND	ROUND
RO	ROUGH OPENING
RVS	REVERSE
RWD	REDWOOD

S

S	SOUTH
SC	SOLID CORE, SHOWER CURTAIN
SCD	SEAT COVER DISPENSER
SCR	SHOWER CURTAIN ROD
SCHED	SCHEDULE
SD	SOAP DISPENSER
SD	SHOWER SOAP DISH
SECT	SECTION
SH	SOAP HOLDER
SHV	SHELVING
SHR	SHOWER
SHR HD	SHOWER HEAD
SHT	SHEET
SIM	SIMILAR
SL	SLOPE
SLDG	SLIDING
SLNT	SEALANT
SM	SQUARE METERS
SMHD	SHELF, METAL, HEAVY DUTY
SMLD	SHELF, METAL, LIGHT DUTY
SND	SANITARY NAPKIN DISPENSER
SNDU	SPECIFICATION
SPEC	SQUARE
SQ	SERVICE SINK
SS	SANITARY NAPKIN DISPOSAL UNIT
SST	STAINLESS STEEL
STA	STATION
STC	SOUND TRANSMISSION CLASS
STD	STANDARD
STL	STEEL
STOR	STORAGE
STRUCT	STRUCTURAL
SURR	SURROUND
SUSP	SUSPEND(ED)
SW	SWITCH
SYMM	SYMMETRICAL

T

T	TREAD
TB	TOWEL BAR
TBCH	TOOTH BRUSH HOLDER
TBD	TACKBOARD
TEL	TELEPHONE
TECH	TECHNICAL
TEMP	TEMPERATURE
TMPD	TEMPERED
THK	THICK(NESS)
TOC	TOP OF CURB
TOCS	TACTICAL OPERATIONS CENTERS
TOP	TOP OF PAVEMENT
TOS	TOP OF SLAB
TOW	TOP OF WALL
TP	TOWEL PIN
TPD	TOILET PAPER DISPENSER
TPH	TOILET PAPER HOLDER
TSCTD	TOILET TISSUE DISPENSER & SEAT COVER DISPENSER
TSCTDSND	SANITARY NAPKIN DISPOSAL / TP HOLDER
TTH	TOOTHBRUSH AND TUMBLER HOLDER
TV	TELEVISION
TYP	TYPICAL
TWC	TEXTURED WALL COATING

U

U/C	UNDER COUNTER
UL	UNDERWRITERS LABORATORIES
UNFIN	UNFINISHED
UNIV	UNIVERSITY
UNO	UNLESS NOTED OTHERWISE
UR	URINAL

V

VERT	VERTICAL
VEST	VESTIBULE
VIF	VERIFY IN FIELD

W

W	WEST, WIDE, WIDTH
W/	WITH
WB	WEATHER BARRIER
WC	WATER CLOSET
WD	WOOD
WDW	WINDOW
WH	WATER HEATER
WO	WHERE OCCURS
W/O	WITHOUT
WPM	WATERPROOF MEMBRANE
WP	WATERPROOF(ING)
WR	WATER RESISTANT, WASTE RECEPTACLE
WS	WORKSTATION
WSCT	WAINSCOT
WSTR	WASTE RECEPTACLE
WT	WEIGHT
WWF	WELDED WIRE FABRIC

GENERAL NOTES

1. COMPLY WITH THE LATEST CITY, STATE, AND FEDERAL LAWS, BUILDING CODES, THEIR ADDITIONS, ADDENDA, AND AMENDMENTS IN THE CONSTRUCTION OF THIS PROJECT.
2. USE DIMENSIONS NOTED ON DRAWINGS ONLY. DO NOT SCALE DIMENSIONS FROM THE DRAWINGS.
3. REPAIR ALL DAMAGE CAUSED BY CONSTRUCTION OF THIS PROJECT.
4. ALL ITEMS & MATERIALS NOTED WITHIN THESE DRAWINGS ARE NEW UNLESS INDICATED OTHERWISE.
5. FIRE SAFETY DURING CONSTRUCTION, ALTERATION OR DEMOLITION SHALL BE IN ACCORDANCE WITH NFPA 1, FIRE CODE, 2021 EDITION.

LEGEND

- A1 / AE201 — EXT ELEVATION OR SECTION REFERENCE; SHT WHERE OCCURS (TYP)
- A1 / AE203 — INT ELEVATION OR SECTION REFERENCE
- A / B / C / D — A1 / A-P6.9 — TYP INT ELEVATION REFERENCE
- A1 / AE401 — DETAIL REFERENCE
- ROOM NAME 101 — ROOM NAME & NUMBER
- 101 — DOOR MARK
- 101 — WINDOW MARK
- A1 — WALL TYPE
- 1 — KEY NOTE

REV NO.	SYM.	DESCRIPTION	SHT__ OF___	DATE	APPROVED: DOD ADMINISTRATOR

GLENN E. MASON
LICENSED PROFESSIONAL ARCHITECT
No. 4073
HAWAII, U.S.A.

This work was prepared by me or under my supervision, and construction of this project will be under my observation.

Signature — Expiration Date of the License: 4/30/2028

DEPARTMENT OF DEFENSE
STATE OF HAWAII

HAWAII ARMY NATIONAL GUARD
B1788 BOILER ROOM IMPROVEMENTS

KALAELOA, OAHU, HAWAII

BUILDING 1788
ABBREVIATIONS, MATERIALS, LEGENDS AND GENERAL NOTES

MASON		JOB NO.	DRAWING NO.
DESIGNED BY: AA	CHECKED BY: GM	CA–202610–C	A-001
DRAWN BY: PD, EC	APPROVED BY: GM	DATE AUG 2026	SHEET 6 OF 25 SHEETS
SCALE: AS NOTED			

FILE_____ DRAWER_____ FOLDER_____

SPECIFICATIONS

CAST-IN-PLACE CONCRETE SPECIFICATIONS:

CAST-IN-PLACE CONCRETE

PROVIDE 4-INCH-THICK CONCRETE PADS UNDER MECHANICAL EQUIPMENT AS REQUIRED OR THICKNESS INDICATED. REINFORCE AS INDICATED. DOWEL TO FLOOR STRUCTURE AROUND PERIMETER OF PAD. REFER TO MECHANICAL DRAWINGS FOR LOCATIONS. PAD SIZE TO EXTEND 6-INCHES BEYOND EDGE OF EQUIPMENT ON ALL SIDES UNLESS OTHERWISE INDICATED. SET ANCHOR BOLTS FOR MACHINES AND EQUIPMENT AT CORRECT ELEVATIONS, COMPLYING WITH DIAGRAMS OR TEMPLATES OF MANUFACTURER FURNISHING MACHINES AND EQUIPMENT.

INCLUDE FORMWORK, REINFORCEMENT, CONCRETE MATERIALS, MIXTURE DESIGN, BONDING AGENTS, CORROSION-INHIBITING MATERIALS, PLACEMENT PROCEDURES, AND FINISHES.

SUBMITTALS

FOR EACH TYPE OF PRODUCT INDICATED AND REQUIRED FOR INSTALLATION. INCLUDE THE FOLLOWING:

ADMIXTURES: INCLUDE LIMITATIONS OF USE, INCLUDING RESTRICTIONS ON CEMENTITIOUS MATERIALS, SUPPLEMENTARY CEMENTITIOUS MATERIALS, AIR ENTRAINMENT, AGGREGATES, TEMPERATURE AT TIME OF CONCRETE PLACEMENT, RELATIVE HUMIDITY AT TIME OF CONCRETE PLACEMENT, CURING CONDITIONS, AND USE OF OTHER ADMIXTURES.

DESIGN MIXTURES: FOR EACH CONCRETE MIXTURE. SUBMIT ALTERNATE DESIGN MIXTURES WHEN CHARACTERISTICS OF MATERIALS, PROJECT CONDITIONS, WEATHER, TEST RESULTS, OR OTHER CIRCUMSTANCES WARRANT ADJUSTMENTS.

CONCRETE INSTALLATION: A QUALIFIED INSTALLER WHO EMPLOYS PROJECT PERSONNEL QUALIFIED AS ACI-CERTIFIED FLATWORK TECHNICIAN AND FINISHER AND SUPERVISOR WHO IS AN ACI-CERTIFIED CONCRETE FLATWORK TECHNICIAN. INSTALLER SHALL BE EXPERIENCED CAST-IN-PLACE CONCRETE INSTALLER, WITH NOT LESS THAN FIVE CONSECUTIVE YEARS' EXPERIENCE, SPECIALIZING IN INSTALLING CAST-IN-PLACE CONCRETE SIMILAR IN MATERIAL, DESIGN, AND EXTENT TO THAT INDICATED FOR THIS PROJECT AND WHOSE WORK HAS RESULTED IN CONSTRUCTION WITH A RECORD OF SUCCESSFUL IN-SERVICE PERFORMANCE.

MATERIAL CERTIFICATES: FOR EACH OF THE FOLLOWING, SIGNED BY MANUFACTURERS:
- CEMENTITIOUS MATERIALS.
- ADMIXTURES.
- FORM MATERIALS AND FORM-RELEASE AGENTS.
- STEEL REINFORCEMENT AND ACCESSORIES.
- CURING COMPOUNDS.
- BONDING AGENTS.
- ADHESIVES.
- SEMIRIGID JOINT FILLER.
- JOINT-FILLER STRIPS.
- REPAIR MATERIALS.
- MINUTES OF PREINSTALLATION CONFERENCE.

DELIVERY, STORAGE, AND HANDLING
DELIVER, STORE, AND HANDLE STEEL REINFORCEMENT TO PREVENT BENDING AND DAMAGE.
COMPLY WITH MANUFACTURER'S WRITTEN INSTRUCTIONS FOR MINIMUM AND MAXIMUM TEMPERATURE REQUIREMENTS AND OTHER CONDITIONS FOR STORAGE. STORE CEMENTITIOUS MATERIALS OFF THE GROUND, UNDER COVER, AND IN A DRY LOCATION.

PRODUCTS

SOURCE LIMITATIONS:
PROVIDE ALL CONCRETE PRODUCT FROM SINGLE SOURCE AND FROM SINGLE MANUFACTURER WITH RESOURCES TO PROVIDE PRODUCTS OF CONSISTENT QUALITY IN APPEARANCE AND PHYSICAL PROPERTIES.

BONDING AGENTS:
EPOXY-MODIFIED, CEMENTITIOUS BONDING AND ANTICORROSION AGENT: MANUFACTURED PRODUCT THAT CONSISTS OF WATER-INSENSITIVE EPOXY ADHESIVE, PORTLAND CEMENT, AND WATER-BASED SOLUTION OF CORROSION-INHIBITING CHEMICALS THAT FORMS A PROTECTIVE FILM ON STEEL REINFORCEMENT.

EPOXY BONDING AGENT: ASTM C881/C881M TYPE II OR TYPE V BONDING SYSTEM, AS REQUIRED, FREE OF VOCS.

JOINT FILLER
EPOXY JOINT FILLER: TWO-COMPONENT, SEMIRIGID, 100 PERCENT SOLIDS, EPOXY RESIN WITH A SHORE A DUROMETER HARDNESS OF AT LEAST 80 IN ACCORDANCE WITH ASTM D2240.

CORROSION-INHIBITING MATERIALS
CORROSION-INHIBITING TREATMENT: WATERBORNE SOLUTION OF ALKALINE CORROSION-INHIBITING CHEMICALS FOR CONCRETE-SURFACE APPLICATION THAT PENETRATES CONCRETE BY DIFFUSION AND FORMS A PROTECTIVE FILM ON STEEL REINFORCEMENT.

COMPOSITE REINFORCEMENT MATERIALS
COMPOSITE STRUCTURAL REINFORCEMENT: MANUFACTURER'S SYSTEM CONSISTING OF CARBON-FIBER OR GLASS-FIBER REINFORCEMENT IN THE FORM OF TOW SHEET WITH FIELD-APPLIED SATURANT OR PREIMPREGNATED SHEET AND EPOXY PRIMERS, FILLERS, ADHESIVES, SATURANTS, AND TOPCOATS, DESIGNED FOR USE AS EXTERNALLY BONDED STRUCTURAL REINFORCEMENT FOR CONCRETE.

PERFORMANCE REQUIREMENTS
CONCRETE FORMWORK: DESIGN, ENGINEER, ERECT, SHORE, BRACE, AND MAINTAIN FORMWORK, SHORES, AND RESHORES IN ACCORDANCE WITH ACI 301, TO SUPPORT VERTICAL, LATERAL, STATIC, AND DYNAMIC LOADS, AND CONSTRUCTION LOADS THAT MIGHT BE APPLIED, UNTIL STRUCTURE CAN SUPPORT SUCH LOADS, SO THAT RESULTING CONCRETE CONFORMS TO THE REQUIRED SHAPES, LINES, AND DIMENSIONS.

FORM-FACING MATERIALS
SMOOTH-FORMED FINISHED CONCRETE: FORM-FACING PANELS THAT WILL PROVIDE CONTINUOUS, TRUE, AND SMOOTH CONCRETE SURFACES. FURNISH IN LARGEST PRACTICABLE SIZES TO MINIMIZE NUMBER OF JOINTS. PLYWOOD, METAL, OR OTHER APPROVED PANEL MATERIALS.

CAST-IN-PLACE CONCRETE SPECIFICATIONS CONT:

FORM-RELEASE AGENT: COMMERCIALLY FORMULATED FORM-RELEASE AGENT THAT WILL NOT BOND WITH, STAIN, OR ADVERSELY AFFECT CONCRETE SURFACES AND WILL NOT IMPAIR SUBSEQUENT TREATMENTS OF CONCRETE SURFACES. FORMULATE FORM-RELEASE AGENT WITH RUST INHIBITOR FOR STEEL FORM-FACING MATERIALS.

ADMIXTURES
AIR-ENTRAINING ADMIXTURE: ASTM C260.
CHEMICAL ADMIXTURES: IF USED, PROVIDE ADMIXTURES CERTIFIED BY MANUFACTURERS TO BE COMPATIBLE WITH OTHER ADMIXTURES AND THAT WILL NOT CONTRIBUTE WATER-SOLUBLE CHLORIDE IONS EXCEEDING THOSE PERMITTED IN HARDENED CONCRETE. DO NOT USE CALCIUM CHLORIDE OR ADMIXTURES CONTAINING CALCIUM CHLORIDE.

CURING MATERIALS
GENERAL: CURING MATERIALS USED SHALL BE GUARANTEED BY MANUFACTURER, PRIOR TO APPLICATION AND USE, TO NOT AFFECT THE BOND OR PERFORMANCE OF APPLIED FINISHES. NAMED PRODUCTS MAY BE USED WHERE MANUFACTURER'S DOCUMENTATION IS PROVIDED DURING SUBMITTALS.
ABSORPTIVE COVER: AASHTO M 182, CLASS 2, BURLAP CLOTH MADE FROM JUTE OR KENAF, WEIGHING APPROXIMATELY 9 OZ./SQ. YD. WHEN DRY.
MOISTURE-RETAINING COVER: ASTM C171, POLYETHYLENE FILM OR WHITE BURLAP-POLYETHYLENE SHEET..
WATER: POTABLE.
CLEAR, WATERBORNE, MEMBRANE-FORMING, DISSIPATING CURING COMPOUND: ASTM C309, TYPE 1, CLASS B.

RELATED MATERIALS
- EXPANSION- AND ISOLATION-JOINT-FILLER STRIPS: ASTM D1751, ASPHALT-SATURATED CELLULOSIC FIBER, ASTM D1752 CORK OR SELF-EXPANDING CORK, WITH CAP STRIP FOR SEALANT; OR CLOSED-CELL FOAM WITH TEAR-OFF STRIP.
- AT INTERIOR, ROUND, CURVED PENETRATIONS OR JOINTS: PROVIDE CLOSED CELL, NEOPRENE FILLER. COMPATIBLE WITH SEALANTS AND USE INDICATED.
- SEMIRIGID JOINT FILLER: TWO-COMPONENT, SEMIRIGID, 100 PERCENT SOLIDS, EPOXY RESIN WITH A TYPE A SHORE DUROMETER HARDNESS OF 80 PER ASTM D 2240.
- BONDING AGENT: ASTM C1059, TYPE II, NON-REDISPERSIBLE, ACRYLIC EMULSION OR STYRENE BUTADIENE.
- EPOXY-BONDING ADHESIVE: ASTM C881, TWO-COMPONENT EPOXY RESIN, CAPABLE OF HUMID CURING AND BONDING TO DAMP SURFACES, OF CLASS,

SUITABLE FOR APPLICATION TEMPERATURE AND GRADE TO SUIT REQUIREMENTS, AND AS FOLLOWS: TYPES I AND II FOR NON-LOAD BEARING AND TYPES IV AND V, LOAD BEARING, FOR BONDING HARDENED OR FRESHLY MIXED CONCRETE TO HARDENED CONCRETE.

CONCRETE MIXTURES, GENERAL
- PREPARE DESIGN MIXTURES FOR EACH TYPE AND STRENGTH OF CONCRETE, PROPORTIONED ON THE BASIS OF LABORATORY TRIAL MIXTURE OR FIELD TEST DATA, OR BOTH, ACCORDING TO ACI 301 AND IN ACCORDANCE WITH THE FOLLOWING:
  - COMPRESSIVE STRENGTH: 4,000 PSI MINIMUM.
  - LIMIT WATER-SOLUBLE, CHLORIDE-ION CONTENT IN HARDENED CONCRETE TO 0.15 PERCENT BY WEIGHT OF CEMENT.
- ADMIXTURES, GENERAL: USE ADMIXTURES ACCORDING TO MANUFACTURER'S WRITTEN INSTRUCTIONS. DO NOT ADD MULTIPLE ADMIXTURES SIMULTANEOUSLY.
  - USE WATER-REDUCING, HIGH-RANGE WATER-REDUCING OR PLASTICIZING ADMIXTURE OR HIGH-RANGE WATER-REDUCING ADMIXTURE (SUPERPLASTICIZER) IN CONCRETE, AS REQUIRED, FOR PLACEMENT AND WORKABILITY.
  - USE WATER-REDUCING AND RETARDING ADMIXTURE WHEN REQUIRED BY HIGH TEMPERATURES, LOW HUMIDITY, OR OTHER ADVERSE PLACEMENT CONDITIONS.
  - USE WATER-REDUCING ADMIXTURE IN PUMPED CONCRETE, CONCRETE FOR SLABS, CONCRETE REQUIRED TO BE WATERTIGHT, AND CONCRETE WITH A WATER-CEMENTITIOUS MATERIALS RATIO BELOW 0.50.
  - AT BOARD-FORMED CONCRETE, USE WATER-REDUCING AND PLASTICIZING ADMIXTURES.

EXECUTION

FORMWORK
- DESIGN, ERECT, SHORE, BRACE, AND MAINTAIN FORMWORK, ACCORDING TO ACI 301, TO SUPPORT VERTICAL, LATERAL, STATIC, AND DYNAMIC LOADS, AND CONSTRUCTION LOADS THAT MIGHT BE APPLIED, UNTIL CONCRETE STRUCTURE CAN SUPPORT SUCH LOADS.
- CONSTRUCT FORMWORK SO CONCRETE MEMBERS AND STRUCTURES ARE OF SIZE, SHAPE, ALIGNMENT, ELEVATION, AND POSITION INDICATED, WITHIN TOLERANCE LIMITS OF ACI 117.
- LIMIT CONCRETE SURFACE IRREGULARITIES, DESIGNATED BY ACI 347R AS ABRUPT OR GRADUAL, AS FOLLOWS:
  - SURFACE FINISH-3.0: ACI 117 CLASS A, 1/8 INCH FOR SMOOTH-FORMED FINISHED SURFACES.
  - SURFACE FINISH-2.0: ACI 117 CLASS B, 1/4 INCH FOR ROUGH-FORMED FINISHED SURFACES AND BOARD-FORMED CONCRETE.
- CONSTRUCT FORMS TIGHT ENOUGH TO PREVENT LOSS OF CONCRETE MORTAR.
- FABRICATE FORMS FOR EASY REMOVAL WITHOUT HAMMERING OR PRYING AGAINST CONCRETE SURFACES. PROVIDE CRUSH OR WRECKING PLATES WHERE STRIPPING MAY DAMAGE CAST CONCRETE SURFACES.
- SET EDGE FORMS, BULKHEADS, AND INTERMEDIATE SCREED STRIPS FOR SLABS TO ACHIEVE REQUIRED ELEVATIONS AND SLOPES IN FINISHED CONCRETE SURFACES. PROVIDE AND SECURE UNITS TO SUPPORT SCREED STRIPS; USE STRIKE-OFF TEMPLATES OR COMPACTING-TYPE SCREEDS.
- CLEAN FORMS AND ADJACENT SURFACES TO RECEIVE CONCRETE. REMOVE CHIPS, WOOD, SAWDUST, DIRT, AND OTHER DEBRIS JUST BEFORE PLACING CONCRETE.
- RETIGHTEN FORMS AND BRACING BEFORE PLACING CONCRETE, AS REQUIRED, TO PREVENT MORTAR LEAKS AND MAINTAIN PROPER ALIGNMENT.
- COAT CONTACT SURFACES OF FORMS WITH FORM-RELEASE AGENT, ACCORDING TO MANUFACTURER'S WRITTEN INSTRUCTIONS, BEFORE PLACING REINFORCEMENT.

JOINTS
- GENERAL: CONSTRUCT JOINTS TRUE TO LINE WITH FACES PERPENDICULAR TO SURFACE PLANE OF CONCRETE.
- CONSTRUCTION JOINTS: INSTALL SO STRENGTH AND APPEARANCE OF CONCRETE ARE NOT IMPAIRED, AT LOCATIONS INDICATED OR AS APPROVED BY THE CO.

CAST-IN-PLACE CONCRETE SPECIFICATIONS CONT:

- USE A BONDING AGENT OR ROUGHEN INTERFACE TO 1/4-INCH AMPLITUDE AT LOCATIONS WHERE FRESH CONCRETE IS PLACED AGAINST HARDENED OR PARTIALLY HARDENED CONCRETE SURFACES.
- PROVIDE KEY PER DRAWINGS.
- DOWEL IN REBAR WERE INDICATED IN DRAWINGS

CONCRETE PLACEMENT
BEFORE PLACING CONCRETE, VERIFY THE FOLLOWING:
- THAT INSTALLATION OF FORMWORK, REINFORCEMENT, AND EMBEDDED ITEMS IS COMPLETE AND THAT REQUIRED INSPECTIONS HAVE BEEN PERFORMED.
- DEPOSIT CONCRETE CONTINUOUSLY IN ONE LAYER OR IN HORIZONTAL LAYERS OF SUCH THICKNESS THAT NO NEW CONCRETE WILL BE PLACED ON CONCRETE THAT HAS HARDENED ENOUGH TO CAUSE SEAMS OR PLANES OF WEAKNESS. IF A SECTION CANNOT BE PLACED CONTINUOUSLY, PROVIDE CONSTRUCTION JOINTS AS INDICATED. DEPOSIT CONCRETE TO AVOID SEGREGATION.
- DEPOSIT CONCRETE IN HORIZONTAL LAYERS OF DEPTH TO NOT EXCEED FORMWORK DESIGN PRESSURES AND IN A MANNER TO AVOID INCLINED CONSTRUCTION JOINTS.
- CONSOLIDATE PLACED CONCRETE WITH MECHANICAL VIBRATING EQUIPMENT ACCORDING TO ACI 301.
- DO NOT USE VIBRATORS TO TRANSPORT CONCRETE INSIDE FORMS. INSERT AND WITHDRAW VIBRATORS VERTICALLY AT UNIFORMLY SPACED LOCATIONS TO RAPIDLY PENETRATE PLACED LAYER AND AT LEAST 6 INCHES INTO PRECEDING LAYER. DO NOT INSERT VIBRATORS INTO LOWER LAYERS OF CONCRETE THAT HAVE BEGUN TO LOSE PLASTICITY. AT EACH INSERTION, LIMIT DURATION OF VIBRATION TO TIME NECESSARY TO CONSOLIDATE CONCRETE AND COMPLETE EMBEDMENT OF REINFORCEMENT AND OTHER EMBEDDED ITEMS WITHOUT CAUSING MIXTURE CONSTITUENTS TO SEGREGATE.
- HOT-WEATHER PLACEMENT: COMPLY WITH ACI 301 AND AS FOLLOWS:
  - MAINTAIN CONCRETE TEMPERATURE BELOW 90 DEG F AT TIME OF PLACEMENT. CHILLED MIXING WATER OR CHOPPED ICE MAY BE USED TO CONTROL TEMPERATURE, PROVIDED WATER EQUIVALENT OF ICE IS CALCULATED TO TOTAL AMOUNT OF MIXING WATER. USING LIQUID NITROGEN TO COOL CONCRETE IS CONTRACTOR'S OPTION.
  - FOG-SPRAY FORMS, STEEL REINFORCEMENT, AND SUBGRADE JUST BEFORE PLACING CONCRETE. KEEP SUBGRADE MOISTURE UNIFORM WITHOUT STANDING WATER, SOFT SPOTS, OR DRY AREAS.

FINISHING FORMED SURFACES
- SMOOTH-FORMED FINISH, EXPOSED: AS-CAST CONCRETE TEXTURE IMPARTED BY FORM-FACING MATERIAL, ARRANGED IN AN ORDERLY AND SYMMETRICAL MANNER WITH A MINIMUM OF SEAMS. REMOVE FINS AND OTHER PROJECTIONS THAT EXCEED SPECIFIED LIMITS ON FORMED-SURFACE IRREGULARITIES ACCORDING TO ACI 301 SURFACE FINISH-3.0 (SF-3.0) AND AS FOLLOWS:
- APPLY TO CONCRETE SURFACES EXPOSED TO PUBLIC VIEW OR TO BE COVERED WITH A COATING OR COVERING MATERIAL APPLIED DIRECTLY TO CONCRETE.

FINISHING SLABS
- GENERAL: COMPLY WITH ACI 302.1R RECOMMENDATIONS FOR SCREEDING, STRAIGHTENING, AND FINISHING OPERATIONS FOR CONCRETE SURFACES. DO NOT WET CONCRETE SURFACES.
- TROWEL AND FINE-BROOM FINISH: APPLY A FIRST TROWEL FINISH, TO SURFACES INDICATED AND TO SURFACES WHERE CERAMIC OR QUARRY TILE IS TO BE INSTALLED BY EITHER THICKSET OR THIN-SET METHOD. WHILE CONCRETE IS STILL PLASTIC, SLIGHTLY SCARIFY SURFACE WITH A FINE BROOM.

MISCELLANEOUS CONCRETE ITEMS

CONCRETE PROTECTION AND CURING
- GENERAL: PROTECT FRESHLY PLACED CONCRETE FROM PREMATURE DRYING AND EXCESSIVE COLD OR HOT TEMPERATURES. COMPLY WITH ACI 306.1 FOR COLD-WEATHER PROTECTION AND WITH RECOMMENDATIONS IN ACI 305R FOR HOT-WEATHER PROTECTION DURING CURING.
- MOISTURE-RETAINING-COVER CURING: COVER CONCRETE SURFACES WITH MOISTURE-RETAINING COVER FOR CURING CONCRETE, PLACED IN WIDEST PRACTICABLE WIDTH, WITH SIDES AND ENDS LAPPED AT LEAST 12 INCHES, AND SEALED BY WATERPROOF TAPE OR ADHESIVE. CURE FOR NOT LESS THAN SEVEN DAYS. IMMEDIATELY REPAIR ANY HOLES OR TEARS DURING CURING PERIOD USING COVER MATERIAL AND WATERPROOF TAPE.

FIELD QUALITY CONTROL
- TESTING AND INSPECTING: ENGAGE A SPECIAL INSPECTOR AND QUALIFIED TESTING AND INSPECTING AGENCY, TO PERFORM FIELD TESTS AND INSPECTIONS AND PREPARE TEST REPORTS.
- TESTING AGENCY: ENGAGE A QUALIFIED INDEPENDENT TESTING AND INSPECTING AGENCY TO PERFORM TESTS, AND INSPECTIONS AND TO SUBMIT TEST REPORTS.

REV NO.	SYM.	DESCRIPTION	SHT__ OF__	DATE	APPROVED: DOD ADMINISTRATOR

GLENN E. MASON
LICENSED PROFESSIONAL ARCHITECT
No. 4073
HAWAII, U.S.A.

This work was prepared by me or under my supervision, and construction of this project will be under my observation.

4/30/2028
Signature Expiration Date of the License

DEPARTMENT OF DEFENSE
STATE OF HAWAII

HAWAII ARMY NATIONAL GUARD
B1788 BOILER ROOM IMPROVEMENTS

KALAELOA, OAHU, HAWAII

BUILDING 1788
SPECIFICATIONS

MASON		JOB NO.	DRAWING NO.
DESIGNED BY: AA	CHECKED BY: GM	CA-202610-C	A-002
DRAWN BY: PD, EC	APPROVED BY: GM	DATE	SHEET
SCALE: AS NOTED		AUG 2026	7 OF 25 SHEETS

FILE_____ DRAWER_____ FOLDER_____

SPECIFICATIONS

FLASHING OF EXISTING EPDM MEMBRANE ROOFING SPECIFICATIONS

1. GENERAL REQUIRMENTS

   ALL WORK SHALL COMPLY WITH THE CURRENT FIRESTONE RUBBERGARD EPDM SPECIFICATION AND SHALL USE ONLY FIRESTONE-APPROVED ACCESSORIES AND SEALANTS. CONTRACTOR SHALL PREPARE, PRIME, FLASH AND SEAL THE PENETRATION TO ACHIEVE A WATERTIGHT CONDITION ACCEPTABLE TO THE ROOFING MANUFACTURER.

2. SURFACE PREPARATION
   a. CLEAN THE EXISTING EPDM MEMBRANE AND THE EXPOSED SURFACE OF THE STAINLESS-STEEL PLATE IN ACCORDANCE WITH FIRESTONE REQUIREMENTS.
   b. REMOVE DIRT, DUST, OILS, AND CONTAMINANTS TO ENSURE FULL ADHESION OF FLASHING MATERIALS.

3. PRIMING
   a. APPLY FIRESTONE QUICKPRIME PLUS TO THE EXISTING EPDM MEMBRANE, THE STAINLESS-STEEL PLATE AND THE IMMEDIATE AREA SURROUNDING THE PENETRATION. ALLOW PRIMER TO FLASH OFF AS RECOMMENDED BY THE MANUFACTURER

4. UNCURED EPDM FLASHING INSTALLATION
   a.CUT A SINGLE PIECE OF FIRESTONE QUICKSEAM FLASHING (UNCURED EPDM WITH PRE-APPLIED TAPE) SIZED TO EXTEND A MINIMUM OF 3 INCHES BEYOND ALL SIDES OF THE PLATE OR ANCHOR OR PENETRATION.
   b.WHERE APPLICABLE, CUT A CENTERED HOLE IN THE FLASHING PIECE APPROXIMATELY 25 PERCENT SMALLER THAN THE OUTSIDE DIAMETER OF THE PIPE. FOR A 2-INCH PIPE, CUT AN OPENING APPROXIMATELY 1.5 INCHES IN DIAMETER.
   c. INSTALL THE FLASHING OVER THE PIPE AND WORK IT DOWN INTO FULL CONTACT WITH THE PRIMED PLATE, MEMBRANE SURFACE, AND BOLT HEADS, ENSURING THE UNCURED EPDM STRETCHES TO FORM A TIGHT SEAL AROUND THE PIPE.
   d. ROLL ALL SURFACES WITH A SILICONE HAND ROLLER TO ELIMINATE BRIDGING, WRINKLES, OR VOIDS.

5. SEALING
   a. APPLY A CONTINUOUS BEAD OF FIRESTONE LAP SEALANT HS AT THE INTERFACE BETWEEN THE FLASHING AND THE PIPE.
   b.APPLY AN ADDITIONAL CONTINUOUS BEAD OF LAP SEALANT HS AROUND THE EXTERIOR PERIMETER OF THE FLASHING PATCH.

6. FINAL ACCEPTANCE
   a. COMPLETE INSTALLATION SHALL BE FULLY ADHERED, WATERTIGHT, SMOOTH, AND FREE OF FISHMOUTHS, AIR POCKETS OR UNADHERED EDGES. WORK SHALL MEET FIRESTONE DETAIL REQUIREMENTS FOR FIELD-WRAPPED PIPE PENETRATIONS AND MEMBRANE REPAIRS.

EXTERIOR PAINTING SPECIFICATIONS

PART 1 - GENERAL

DELIVERY, STORAGE, AND HANDLING

A. STORE MATERIALS NOT IN USE IN TIGHTLY COVERED CONTAINERS IN WELL-VENTILATED AREAS WITH AMBIENT TEMPERATURES CONTINUOUSLY MAINTAINED AT NOT LESS THAN 45 DEG F.
   1. MAINTAIN CONTAINERS IN CLEAN CONDITION, FREE OF FOREIGN MATERIALS AND RESIDUE.
   2. REMOVE RAGS AND WASTE FROM STORAGE AREAS DAILY.

1.2 FIELD CONDITIONS

A. APPLY PAINTS ONLY WHEN TEMPERATURE OF SURFACES TO BE PAINTED AND AMBIENT AIR TEMPERATURES ARE BETWEEN 50 AND 95 F.
B. DO NOT APPLY PAINTS IN RAIN, FOG, OR MIST; WHEN RELATIVE HUMIDITY EXCEEDS 85 PERCENT; AT TEMPERATURES LESS THAN 5 DEG F ABOVE THE DEW POINT; OR TO DAMP OR WET SURFACES.

PART 2 - PRODUCTS

2.1 EXTERIOR PAINTING SCHEDULE: SEE DRAWING FOR COLOR SELECTION.

A. WOOD SUBSTRATES: EXPOSED WOOD FRAMING AND SIDING. LATEX OVER ALKYD PRIMER SYSTEM MPI EXT 6.2A:
   1. PRIME COAT: PRIMER, ALKYD FOR EXTERIOR WOOD, MPI #15.
   2. INTERMEDIATE COAT: LATEX, EXTERIOR, MATCHING TOPCOAT.
   3. TOPCOAT: LATEX, EXTERIOR, LOW SHEEN (MPI GLOSS LEVEL 3-4), MPI #15
B. CONCRETE MASONRY SUBSTRATES. LATEX OVER ALKYD PRIMER SYSTEMS MPI EXT 6.2A:
   1. BLOCK FILLER, LATEX, INTERIOR/EXTERIOR, MPI #4
   2. INTERMEDIATE COAT: LATEX, EXTERIOR, MATCHING TOPCOAT.
   3. TOPCOAT: LATEX, EXTERIOR, LOW SHEEN (MPI GLOSS LEVEL 3-4), MPI #15.

PART 3 - EXECUTION

3.1 EXAMINATION

A. EXAMINE SUBSTRATES AND CONDITIONS, FOR COMPLIANCE WITH REQUIREMENTS FOR MAXIMUM MOISTURE CONTENT AND OTHER CONDITIONS AFFECTING PERFORMANCE OF WORK.
B. VERIFY SUITABILITY OF SUBSTRATES, INCLUDING SURFACE CONDITIONS AND COMPATIBILITY, WITH FINISHES AND PRIMERS.
C. PROCEED WITH COATING APPLICATION ONLY AFTER UNSATISFACTORY CONDITIONS HAVE BEEN CORRECTED.
D. APPLICATION OF COATING INDICATES ACCEPTANCE OF SURFACES AND CONDITIONS.

2

3.2 PREPARATION

A. COMPLY WITH MANUFACTURER'S WRITTEN INSTRUCTIONS APPLICABLE TO SUBSTRATES AND PAINT SYSTEMS INDICATED.
B. CLEAN SUBSTRATES OF SUBSTANCES THAT COULD IMPAIR BOND OF PAINTS, INCLUDING DUST, DIRT, OIL, GREASE, AND INCOMPATIBLE PAINTS AND ENCAPSULANTS.

3.3 INSTALLATION

A. APPLY PAINTS IN ACCORDANCE WITH MANUFACTURER'S WRITTEN INSTRUCTIONS.
   1. USE APPLICATORS AND TECHNIQUES SUITED FOR PAINT AND SUBSTRATE INDICATED.
B. APPLY PAINTS TO PRODUCE SURFACE FILMS WITHOUT CLOUDINESS, SPOTTING, HOLIDAYS, LAPS, BRUSH MARKS, ROLLER TRACKING, RUNS, SAGS, ROPINESS,
   OR OTHER SURFACE IMPERFECTIONS. CUT IN SHARP LINES AND COLOR BREAKS.

3.4 CLEANING AND PROTECTION

A. AT END OF EACH WORKDAY, REMOVE RUBBISH, EMPTY CANS, RAGS, AND OTHER DISCARDED MATERIALS FROM PROJECT SITE.
B. DO NOT CLEAN EQUIPMENT WITH FREE-DRAINING WATER AND PREVENT SOLVENTS, THINNERS, CLEANERS, AND OTHER CONTAMINANTS FROM ENTERING INTO WATERWAYS, SANITARY AND STORM DRAIN SYSTEMS, AND GROUND.
   1. DISPOSE OF CONTAMINANTS IN ACCORDANCE WITH REQUIREMENTS OF AUTHORITIES HAVING JURISDICTION.
   2. ALLOW EMPTY PAINT CANS TO DRY BEFORE DISPOSAL.
C. AFTER COMPLETING PAINT APPLICATION, CLEAN SPATTERED SURFACES. REMOVE SPATTERED PAINTS BY WASHING, SCRAPING, OR OTHER METHODS. DO NOT
   SCRATCH OR DAMAGE ADJACENT FINISHED SURFACES.
D. PROTECT WORK OF OTHER TRADES AGAINST DAMAGE FROM PAINT APPLICATION. CORRECT DAMAGE TO WORK OF OTHER TRADES BY CLEANING, REPAIRING, REPLACING, AND REFINISHING, AS APPROVED BY ARCHITECT, AND LEAVE IN
   AN UNDAMAGED CONDITION.
E. AT COMPLETION OF CONSTRUCTION ACTIVITIES OF OTHER TRADES, TOUCH UP AND RESTORE DAMAGED OR DEFACED PAINTED SURFACES.

ARCHITECTURAL PROJECT NARRATIVE

1. CONCRETE PADS UNDER THE MECHANICAL EQUIPMENT VARY IN CONDITION, SOME REQUIRING SPALL REPAIR WHILE OTHERS COMPLETE DEMOLITION AND REPLACEMENT. PROVIDE 4-INCH-THICK CONCRETE PADS UNDER MECHANICAL EQUIPMENT.
2. INFILL OF DRAINAGE TRENCH.
3. INSTALLATION AND WATERPROOFING OF NEW SOLAR HOT WATER RACKS. WATERPROOFING/SEALING OF EXISTING EPDM MEMBRANE ON THE CONCRETE ROOF SLAB DUE TO REMOVAL OF APPURTENANCES OR NEW PENETRATIONS.
4. ALL EXPOSED INSULATION OUTSIDE OF THE MECHANICAL ROOM SHALL BE PAINTED.

REV NO.	SYM.	DESCRIPTION	SHT__ OF__	DATE	APPROVED: DOD ADMINISTRATOR

GLENN E. MASON
LICENSED PROFESSIONAL ARCHITECT
No. 4073
HAWAII, U.S.A.

This work was prepared by me or under my supervision, and construction of this project will be under my observation.

Signature — Expiration Date of the License: 4/30/2028

DEPARTMENT OF DEFENSE
STATE OF HAWAII

HAWAII ARMY NATIONAL GUARD
B1788 BOILER ROOM IMPROVEMENTS

KALAELOA, OAHU, HAWAII

BUILDING 1788
SPECIFICATIONS

MASON		JOB NO.	DRAWING NO.
DESIGNED BY: AA	CHECKED BY: GM	CA–202610–C	A-003
DRAWN BY: PD, EC	APPROVED BY: GM	DATE: AUG 2026	SHEET 8 OF 25 SHEETS
SCALE: AS NOTED			

FILE_____ DRAWER_____ FOLDER_____

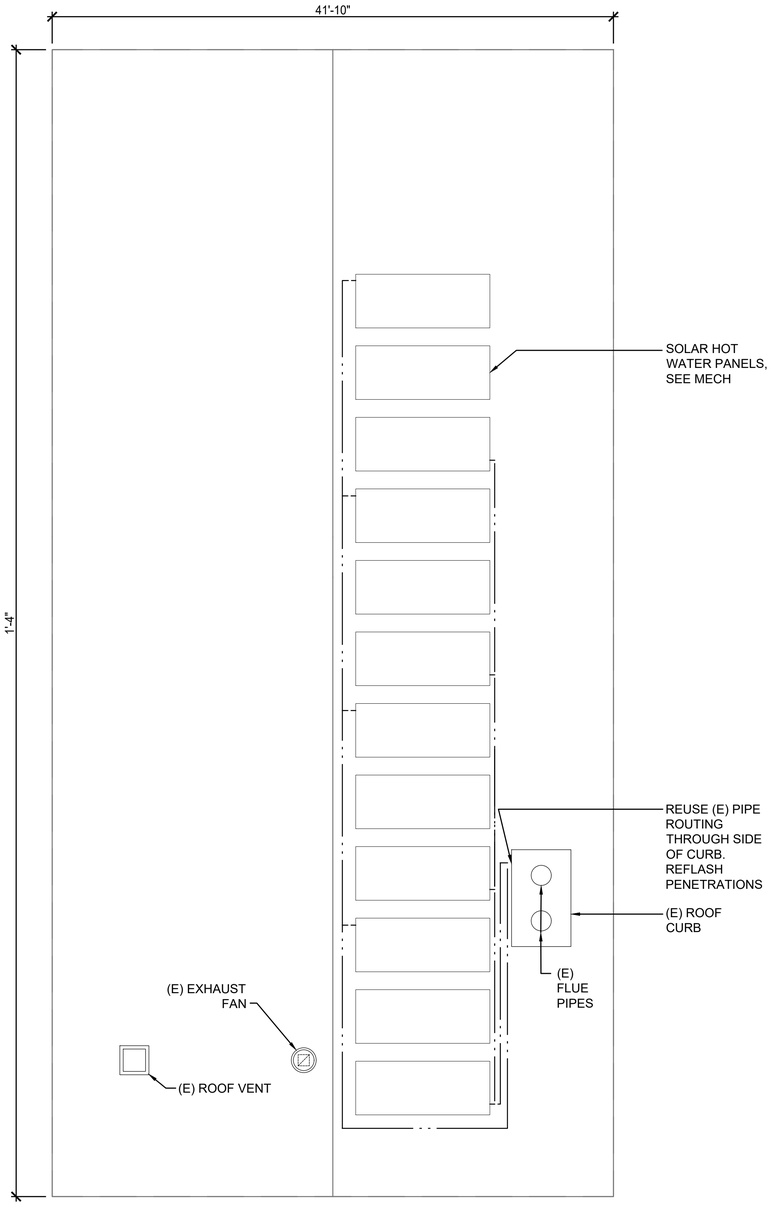

A1 BUILDING 1788 - ROOF PLAN

3/16" = 1'-0"

REF FROM: N/A

0 4' 8' 12'

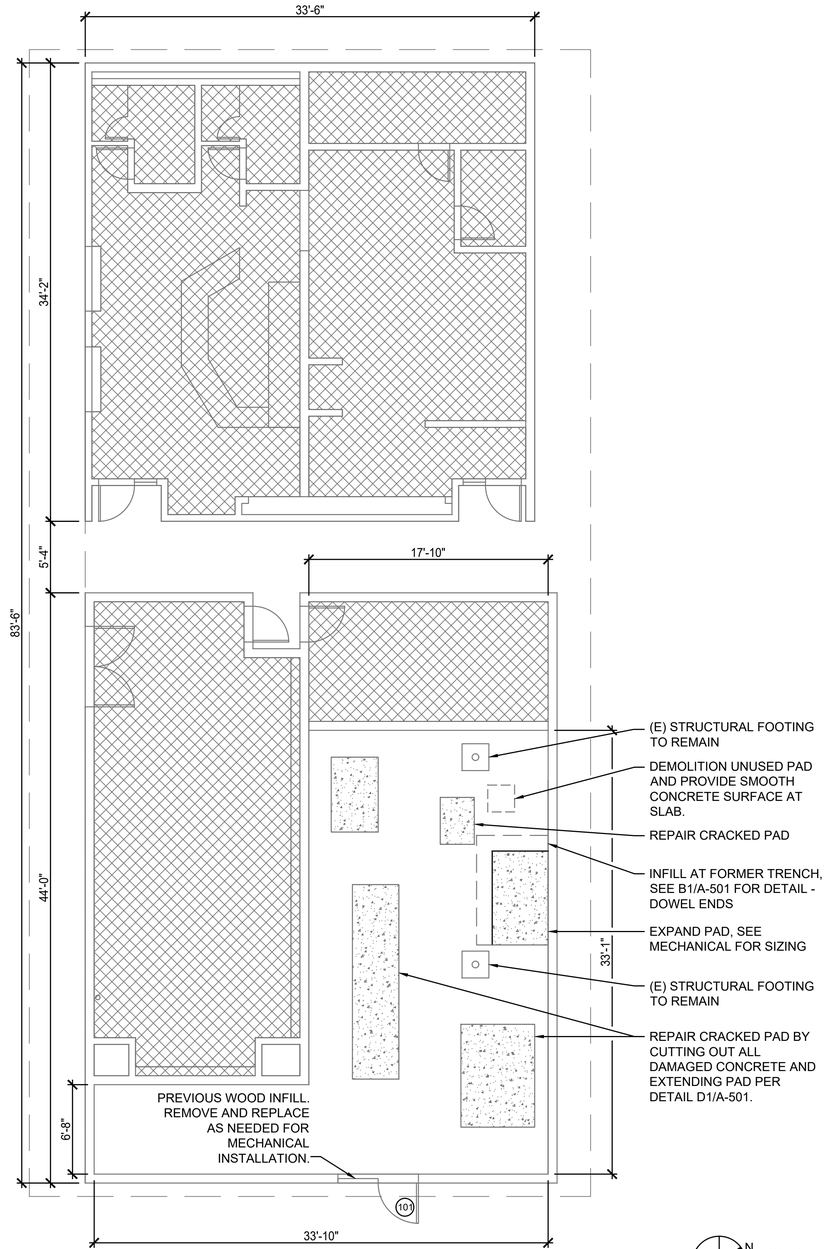

C1 BUILDING 1788 - FLOOR PLAN

3/16" = 1'-0"

REF FROM: N/A

0 4' 8' 12'

N PROJECT NORTH

MAKAI

GENERAL NOTES

1. ALL EXISTING RUBBISH, DEBRIS, AND NON-ESSENTIAL MATERIALS SHALL BE REMOVED BY OWNER PRIOR TO COMMENCEMENT OF NEW WORK.
2. ALL CONCRETE PADS ARE EXISTING UNLESS NOTED OTHERWISE. REPAIR OR REPLACEMENT ARE REQUIRED TO THE SIZE INDICATED ON MECHANICAL PLANS, SEE A-501. FOR EXTENSION OR REPAIR BY EXTENSION DETAIL.
3. INFILL CONCRETE SLAB AT REMOVED DRAINAGE TRENCHES AND FLOOR DRAINS.
4. ALL EXPOSED INSULATION OUTSIDE THE MECHANICAL ROOM SHALL BE PAINTED.

ROOF PLAN NOTES

1. FASTEN NEW SOLAR HOT WATER RACKS DIRECTLY TO CONCRETE ROOF SLAB, THROUGH INSULATION, WO. INSTALL PER COLLECTOR / RACK MANUFACTURER. REPAIR ANY INSULATION DAMAGED DURING INSTALLATION, WO
2. PROVIDE ANCHORS PER SOLAR HOT WATER INSTALLATION GUIDE. USE EPOXY BOLTS OR CONCRETE ANCHOR SCREWS. ALTERNATE FASTENING MUST BE VERIFIED W/ ARCHTECT PRIOR TO EXECUTION.
3. ROUTE SHW PIPING THROUGH EXISTING ROOF PENETRATIONS; FLASH PER ROOF FLASHING SPECIFICATIONS.
4. FLASH ALL NEW PENETRATIONS INCLUDING MECHANICAL FASTENERS WITH FLASHING COMPATIBLE WITH EXISTING FIRESTONE RUBBERGARD WHITE EPDM ROOFING. SEE FLASHING SPECIFICATIONS ON SHEET A-003.

LEGEND

- NOT IN CONTRACT
- (E) EQUIPMENT PAD
- DEMO

DOOR SCHEDULE

DOOR NO	DOOR SIZE (W x H)	TYPE	THICKNESS	DETAIL HEAD	DETAIL JAMB	DETAIL SILL	HDWE SET	SHEET #	REMARKS (SEE REMARKS LIST)
BUILDING 1788									
101	3'-0 X 8'-0	F	1-3/4"	-	-	-	-	-	EXIST TO REMAIN

DOOR TYPES

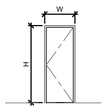

TYPE F
FLUSH

REV NO.	SYM.	DESCRIPTION	SHT__ OF__	DATE	APPROVED: DOD ADMINISTRATOR

GLENN E. MASON
LICENSED PROFESSIONAL ARCHITECT
No. 4073
HAWAII, U.S.A.

This work was prepared by me or under my supervision, and construction of this project will be under my observation.

Signature — Expiration Date of the License: 4/30/2028

DEPARTMENT OF DEFENSE
STATE OF HAWAII

HAWAII ARMY NATIONAL GUARD
B1788 BOILER ROOM IMPROVEMENTS

KALAELOA, OAHU, HAWAII

BUILDING 1788
FLOOR AND ROOF PLAN

MASON

DESIGNED BY: AA	CHECKED BY: GM	JOB NO. CA–202610–C	DRAWING NO. A-101
DRAWN BY: PD, EC	APPROVED BY: GM	DATE AUG 2026	SHEET 9
SCALE: AS NOTED			OF 25 SHEETS

FILE_____ DRAWER_____ FOLDER_____

1. TYPICAL DETAIL FOR ALL INTERIOR SLAB INFILL

2. USE BONDING AGENT WHERE NEW CONCRETE ABUTS EXISTING .

3. SEE CONCRETE SPECIFICATIONS FOR MORE INFORMATION.

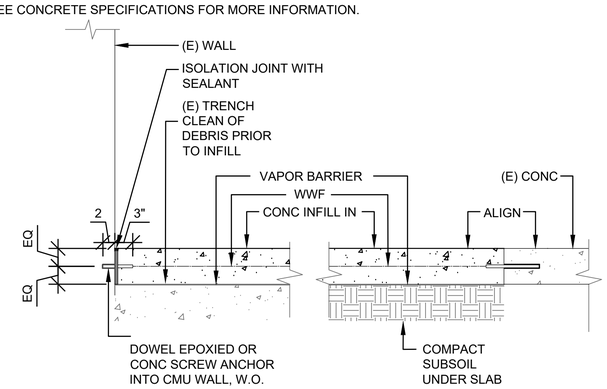

B1 INFILL @ CONCRETE SLAB

1" = 1'-0"

REF FROM:

0 6" 1' 2'

1. PROVIDE 1-1/2" DEEP X 1-1/2" HIGH KEYWAY X 4" LONG KEYWAY SPACED AT 24 O.C. CENTER KEY AT MID-DEPTH OF SLAB.

2. INSTALL #4 DOWELS IN BETWEEN KEYWAYS 24" OC. EXPOXY DOWELS INTO EXISTING SLAB.

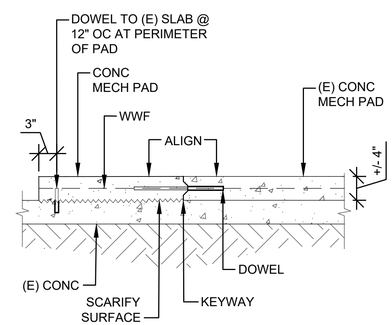

D1 CONC PAD EXTENSION

1" = 1'-0"

REF FROM:

0 6" 1' 2'

REV NO.	SYM.	DESCRIPTION	SHT__ OF__	DATE	APPROVED: DOD ADMINISTRATOR

GLENN E. MASON
LICENSED PROFESSIONAL ARCHITECT
No. 4073
HAWAII, U.S.A.

This work was prepared by me or under my supervision, and construction of this project will be under my observation.

4/30/2028

Signature Expiration Date of the License

DEPARTMENT OF DEFENSE
STATE OF HAWAII

HAWAII ARMY NATIONAL GUARD
B1788 BOILER ROOM IMPROVEMENTS

KALAELOA, OAHU, HAWAII

BUILDING 1788
DETAILS

MASON		JOB NO.	DRAWING NO.
DESIGNED BY: AA	CHECKED BY: GM	CA–202610–C	A-501
DRAWN BY: PD, EC	APPROVED BY: GM	DATE	SHEET
SCALE: AS NOTED		AUG 2026	10 OF 25 SHEETS

FILE_____ DRAWER_____ FOLDER_____

Xref .\x-ref\B1788 - Floor Plan Notes and Legend.dwg

PLUMBING GENERAL NOTES:

1. THE ENTIRE INSTALLATION SHALL COMPLY WITH ALL APPLICABLE REQUIREMENTS OF THE INTERNATIONAL BUILDING CODE AND THE CURRENT VERSION OF THE UNIFORM PLUMBING CODE, UNIFORM FIRE CODE, NATIONAL ELECTRIC SAFETY CODE, ASME BOILER & PRESSURE VESSEL CODE, ASME PRESSURE PIPING CODE, ALL OTHER AGENCIES HAVING JURISDICTION.
2. THE CONTRACTOR SHALL PROVIDE ALL MATERIAL AND EQUIPMENT INCLUDING CUTTING AND PATCHING AS REQUIRED FOR COMPLETE AND OPERATING SYSTEMS. "PROVIDE" SHALL MEAN TO PROCURE ALL NECESSARY AND SPECIFIED MATERIALS AND INSTALL A COMPLETE WORKING INSTALLATION AS REFERENCED ON CONSTRUCTION DRAWINGS.
3. THE DRAWINGS AND SPECIFICATIONS ARE INTENDED TO COVER THE COMPLETE INSTALLATION OF SYSTEMS TO FUNCTION AS DESCRIBED AND SPECIFIED. THE OMISSION OF REFERENCE TO ANY NECESSARY ITEM OF LABOR OR MATERIAL SHALL NOT RELIEVE THE CONTRACTOR FROM PROVIDING SUCH LABOR AND MATERIAL.
4. DRAWINGS DO NOT ATTEMPT TO SHOW EXACT DETAILS OF PIPING AND EXISTING CONDITIONS. PROVIDE OFFSETS AS NECESSARY TO AVOID EXISTING OBSTRUCTIONS OR INTERFERENCE WITH OTHER TRADES. THE CONTRACTOR SHALL REVIEW ALL PIPING RUNS PRIOR TO FABRICATION AND SHALL NOTIFY THE ENGINEER OF ANY INTERFERENCE AND/ OR LACK OF ADEQUATE CLEARANCES IMMEDIATELY.
5. SHOULD PROJECT CONDITIONS REQUIRE REARRANGEMENT OF WORK, THE CONTRACTOR SHALL MARK SUCH CHANGES ON RECORD DRAWINGS. IF THESE CHANGES REQUIRE ALTERNATE METHODS TO THOSE APPROVED BY THE CONTRACT DOCUMENTS, THE CONTRACTOR SHALL SUBMIT SHOP DRAWINGS SHOWING THE PROPOSED ALTERNATE METHODS TO THE ENGINEER FOR APPROVAL. THE CONTRACTOR SHALL NOT PROCEED UNTIL APPROVAL IS OBTAINED.
6. PRIOR TO INSTALLATION PROVIDE SHOP DRAWINGS FOR THE LAYOUT OF EQUIPMENT AND PIPING SHOWING COORDINATION OF ALL WORK WITH ALL OTHER TRADES, INCLUDING MECHANICAL, CONTROLS, AND ELECTRICAL. SUBMIT COORDINATION DRAWINGS FOR REVIEW PRIOR TO INSTALLATION TO ENSURE ADEQUATE ACCESS TO THE SPACES AND TO ALL SERVICEABLE ITEMS. COORDINATION DRAWINGS SHALL OVERLAY HVAC, PLUMBING, FIRE SPRINKLER, ELECTRICAL, AND FIRE ALARM SYSTEMS AND ALL CONFLICTS BETWEEN TRADES SHALL BE NOTED AND RESOLVED.
7. THE CONTRACTOR SHALL OBTAIN APPROVAL FROM THE ARCHITECT BEFORE MAKING ANY PENETRATIONS THROUGH STRUCTURAL MEMBERS, WALLS, AND SLABS.
8. ALL PENETRATIONS THROUGH FIRE RATED WALLS, FLOORS OR PARTITIONS SHALL BE PROPERLY FIRE STOPPED WITH A UL APPROVED SYSTEM APPROPRIATE FOR PENETRATION TYPE. FIRESTOP ALL PENETRATIONS BETWEEN FLOORS. REFER TO ARCHITECTURAL SPECIFICATIONS.
9. ALL EQUIPMENT SHALL BE CAPABLE OF FITTING INTO THE SPACES ALLOCATED. THE CONTRACTOR SHALL REVIEW ALL SPACES WHERE EQUIPMENT IS TO BE INSTALLED PRIOR TO ORDERING OF EQUIPMENT AND SHALL NOTIFY THE ENGINEER OF ANY INADEQUATE CLEARANCES OR CONDITIONS THAT WILL PREVENT THE PROPER INSTALLATION AND OPERATION OF THE EQUIPMENT.
10. ALL EQUIPMENT AND PIPING SHALL BE SEISMICALLY BRACED IN ACCORDANCE WITH THE CURRENT CITY AND COUNTY OF HONOLULU BUILDING CODE FOR SEISMIC ZONE 2A, FACTORY MUTUAL GUIDELINES, AND AS INDICATED IN THE SPECIFICATIONS.
11. PROVIDE MANUAL AIR VENTS AT ALL HIGH POINTS IN COLD WATER AND HOT WATER
12. CONTRACTOR SHALL BE REQUIRED TO HAVE A C-4 OR C-37 LICENSE. CONTRACTOR TO SUBMIT FOR "PERMIT TO OPERATE" WITH STATE BOILER INSPECTOR.
PROVIDE MANUAL AIR VENTS AT ALL HIGH POINTS IN COLD WATER AND HOT WATER
13. CONTRACTOR TO PROVIDE TAB REPORT PRIOR TO COMPLETION OF WORK.

PLUMBING SPECIFICATIONS:

PIPE MATERIALS

1. ALL MATERIALS SHALL BE NEW AND OF THE BEST QUALITY AVAILABLE IN THEIR RESPECTIVE KINDS, FREE FROM ALL DEFECTS AND SHALL BE OF THE MAKE AND TYPES SPECIFIED OR APPROVED EQUAL.
2. SANITARY WASTE, DRAIN AND VENT PIPING
   a) CAST IRON SERVICE WEIGHT HUB AND SPIGOT PIPE AND FITTINGS, ASTM A74, WITH ASTM C564 RUBBER COMPRESSION FITTINGS OR CAULKED AND LEADED JOINTS. (ABOVE AND BELOW GROUND)
3. DOMESTIC WATER PIPING
   a) COPPER TUBING, ASTM B88, TYPE K FOR BURIED UNDERGROUND PIPING AND TYPE L FOR ABOVE GROUND PIPING, WITH ANSI B16.18 OR B16.22 SOLDER JOINT FITTINGS

PLUMBING INSULATION

1. PRE-MOLDED FIBERGLASS PIPE INSULATION, 1" THICK, WITH ALL-SERVICE JACKET, OWENS-CORNING 25 ASJ/SSL OR APPROVED EQUAL. PROVIDE NESTED INSULATION SEGMENTS ON FITTINGS, VALVES, AND FLANGES. SEAL ENDS WITH VAPOR BARRIER MASTIC. PROVIDE 0.016 INCH THICK ALUMINUM JACKET ON PIPING EXPOSED TO THE WEATHER.

HOT WATER CIRCULATING PUMPS

1. DOMESTIC HOT WATER CIRCULATING PUMPS SHALL BE ELECTRICALLY DRIVEN, SINGLE-STAGE, CENTRIFUGAL, WITH MECHANICAL SEALS, SUITABLE FOR THE INTENDED SERVICE. PUMP AND MOTOR SHALL BE SUPPORTED BY THE PIPING ON WHICH IT IS INSTALLED. THE SHAFT SHALL BE ONE-PIECE, HEAT-TREATED, CORROSION-RESISTING STEEL WITH IMPELLER AND SMOOTH-SURFACED HOUSING OF BRONZE. MOTOR SHALL BE TOTALLY ENCLOSED, FAN-COOLED AND SHALL HAVE SUFFICIENT WATTAGE HORSEPOWER FOR THE SERVICE REQUIRED. EACH PUMP MOTOR SHALL BE EQUIPPED WITH AN ACROSS-THE-LINE MAGNETIC CONTROLLER IN A NEMA 250, TYPE 1 ENCLOSURE WITH "START-STOP" SWITCH IN COVER. INTEGRAL SIZE MOTORS SHALL BE PREMIUM EFFICIENCY TYPE IN ACCORDANCE WITH NEMA MG 1. PUMP MOTORS SMALLER THAN 1 HP FRACTIONAL HORSEPOWER PUMP MOTORS SHALL HAVE INTEGRAL THERMAL OVERLOAD PROTECTION. GUARDS SHALL SHIELD EXPOSED MOVING PARTS.

PLUMBING SPECIFICATIONS CONT:

HOT WATER STORAGE TANKS

1. HOT-WATER STORAGE TANKS SHALL BE CONSTRUCTED BY ONE MANUFACTURER, ASME STAMPED FOR THE WORKING PRESSURE, AND SHALL HAVE THE NATIONAL BOARD (ASME) REGISTRATION. THE TANK SHALL BE CEMENT-LINED OR GLASS-LINED STEEL TYPE IN ACCORDANCE WITH AWWA D100. THE HEAT LOSS SHALL CONFORM REQUIREMENTS OF ASHRAE 90.1. EACH TANK SHALL BE EQUIPPED WITH A THERMOMETER, CONFORMING TO ASTM E1, TYPE I, CLASS 3, RANGE C, STYLE AND FORM AS REQUIRED FOR THE INSTALLATION. THERMOMETER SHALL HAVE A SEPARABLE SOCKET SUITABLE FOR A ¾" TAPPED OPENING. TANKS SHALL BE EQUIPPED WITH A PRESSURE GAUGE. STORAGE TANK CAPACITY SHALL BE AS SHOWN.

HEAT PUMP WATER HEATER

1. THE HEAT PUMP WATER HEATER SHALL BE PACKAGED AIR SOURCE EQUIPMENT, FACTORY ASSEMBLED, CHARGED, AND TESTED. THE HEAT PUMP SHALL BE SUITABLE FOR HEATING POTABLE WATER AND HAVE THE CAPABILITY OF PRODUCING NO LESS THAN 160°F WATER UP TO 185°F UNDER PREDETERMINED SOURCE CONDITIONS. THE UNIT SHALL BE FULLY ENCLOSED AND SUITABLE FOR OUTDOOR INSTALLATION. HEAT PUMP WATER CIRCUIT SHALL BE NSF 61 LOW LEAD CERTIFIED BY A THIRD-PARTY NATIONAL TESTING LABORATORY FOR POTABLE WATER APPLICATIONS. THE HEAT PUMP UNIT SHALL CONSIST OF COMPRESSOR, CONDENSER, EVAPORATOR COIL, DIRECT DRIVE EC FAN (EITHER AXIAL OR PLENUM), HOT WATER CIRCULATING PUMP, PIPING, AND CONTROLS. UNIT SHALL BE FACTORY ASSEMBLED, CHARGED, AND TESTED. THE HEAT PUMP SHALL CONTAIN THE FOLLOWING COMPONENTS AND FEATURES:

   a) CABINET AND FRAME: UNIT CABINET SHALL BE 304L STAINLESS STEEL, DESIGNED FOR OUTDOOR OPERATION. CABINET SUPPORTS, CHANNELS AND BEAMS SHALL ALSO BE CONSTRUCTED OF 304L STAINLESS STEEL. UNIT SHALL HAVE STAINLESS STEEL DRIP PAN FOR CONDENSATE.

   b) ELECTRICAL: CONTROL BOX SHALL BE NEMA 1X OR EQUIVALENT.

   c) POTABLE WATER CIRCULATING PUMP: SHALL BE IN-LINE STAINLESS STEEL BODY NSF-61 CERTIFIED, CENTRIFUGAL TYPE, ABLE TO DELIVER RATED FLOW AGAINST THE EXTERNAL HEAD SHOWN ON THE DRAWINGS

   d) ELECTROCOAT EVAPORATOR COATING: EVAPORATOR COATED WITH FLEXIBLE EPOXY POLYMER E-COAT UNIFORMLY APPLIED TO ALL SURFACE AREAS WITH NO MATERIAL BRIDGING BETWEEN FINS. THE COATING PROCESS SHALL ENSURE COMPLETE ENCAPSULATION AND UNIFORM DRY FILM THICKNESS FROM 0.6-1.2 MILS ON ALL SURFACE AREAS INCLUDING FIN EDGES. COATING SHALL PASS 10,000 HOURS SALT SPRAY RESISTANCE PER ASTM B117-90.

VALVES

1. VALVES SHALL HAVE PRESSURE AND TEMPERATURE RATINGS NOT LESS THAN INDICATED AS REQUIRED FOR THE SYSTEM PRESSURES AND TEMPERATURES THAT THE VALVE SERVES.

2. VALVES SHALL BE PROVIDED ON SUPPLIES TO ALL EQUIPMENT AND FIXTURES. VALVES 2-1/2" AND SMALLER SHALL BE BRONZE WITH THREADED BODIES FOR PIPE AND SOLDER-TYPE CONNECTIONS FOR TUBING. VALVES 3" AND LARGER SHALL HAVE FLANGED IRON BODIES AND BRONZE TRIM. GROOVED END VALVES MAY BE PROVIDED IF THE MANUFACTURER CERTIFIES THAT THE VALVES MEET THE PERFORMANCE REQUIREMENTS OF APPLICABLE MSS STANDARD. VALVES SHALL CONFORM TO THE STANDARDS BELOW.

3. VALVES IN INSULATED PIPING: VALVES SHALL HAVE 2" STEM EXTENSIONS AND THE FOLLOWING FEATURES:

   a) GATE VALVES: WITH RISING STEM

   b) BALL VALVES: WITH EXTENDED OPERATING HANDLE OF NON-THERMAL-CONDUCTIVE MATERIAL AND PROTECTIVE SLEEVE THAT ALLOWS OPERATION OF VALVE WITHOUT BREAKING THE VAPOR SEAL OR DISTURBING THE INSULATION

   c) BUTTERFLY VALVES: WITH EXTENDED NECK

4. BALL VALVES: THE FOLLOWING VALVES SHALL CONFORM TO THEIR RESPECTIVE STANDARDS: FLANGED WITH BUTT-WELDING - MSS SP-72. THREADED, SOCKET-WELDING, SOLDER JOINT, GROOVED AND FLARED ENDS - MSS SP-110.

5. GATE VALVES: THE FOLLOWING VALVES SHALL CONFORM TO THEIR RESPECTIVE STANDARDS: CAST IRON, FLANGED AND THREADED - MSS SP-70. BRONZE - MSS SP-80.

6. CHECK VALVES: THE FOLLOWING VALVES SHALL CONFORM TO THEIR RESPECTIVE STANDARDS: CAST IRON, SWING CHECK, FLANGED AND THREADED: MSS SP-71. BRONZE - MSS SP-80.

7. BUTTERFLY VALVES: THE FOLLOWING VALVES SHALL CONFORM TO THEIR RESPECTIVE STANDARDS: MSS SP-67.

8. PLUG VALVES: THE FOLLOWING VALVES SHALL CONFORM TO THEIR RESPECTIVE STANDARDS: CAST-IRON, FLANGED AND THREADED - MSS SP-78

9. PRESSURE REDUCING VALVE: ASSE 1003. PRESSURE REDUCING VALVE (PRV) SHALL MAINTAIN CONSTANT DOWNSTREAM PRESSURE REGARDLESS OF FLUCTUATIONS IN DEMAND. VALVES SHALL BE SUITABLE FOR 150 PSI. THE VALVES SHALL BE OF THE HYDRAULICALLY-OPERATED, PILOT CONTROLLED, GLOBE OR ANGLE TYPE, AND MAY BE ACTUATED EITHER BY DIAPHRAGM OR PISTON. THE PILOT CONTROL SHALL BE THE DIAPHRAGM-OPERATED, ADJUSTABLE, SPRING-LOADED TYPE, DESIGNED TO PERMIT FLOW WHEN CONTROLLING PRESSURE EXCEEDS THE SPRING SETTING. ENDS SHALL BE AS DETERMINED BY THE SIZE OF PIPING, 3" AND LARGER SHALL BE FLANGED AND LESS THAN 3" SHALL BE THREADED. VALVE BODIES SHALL BE BRONZE, CAST IRON OR CAST STEEL WITH BRONZE TRIM. VALVE STEM SHALL BE STAINLESS STEEL. VALVE DISCS AND DIAPHRAGMS SHALL BE SYNTHETIC RUBBER. VALVE SEATS SHALL BE BRONZE. PILOT CONTROLS SHALL BE BRONZE WITH STAINLESS STEEL WORKING PARTS. PRESSURE REDUCING VALVE SHALL BE PROVIDED WITH SHUT OFF VALVES ON EITHER SIDE TO FACILITATE THE REMOVAL AND REPAIR OF THIS VALVE.

PLUMBING SPECIFICATIONS CONT:

10. PRESSURE & TEMPERATURE RELIEF VALVE: WATER HEATERS AND HOT WATER STORAGE TANKS SHALL HAVE A COMBINATION PRESSURE AND TEMPERATURE (P&T) RELIEF VALVE. THE PRESSURE RELIEF ELEMENT OF A P&T RELIEF VALVE SHALL HAVE ADEQUATE CAPACITY TO PREVENT EXCESSIVE PRESSURE BUILDUP IN THE SYSTEM WHEN THE SYSTEM IS OPERATING AT THE MAXIMUM RATE OF HEAT INPUT. THE TEMPERATURE ELEMENT OF A P&T RELIEF VALVE SHALL HAVE A RELIEVING CAPACITY WHICH IS AT LEAST EQUAL TO THE TOTAL INPUT OF THE HEATERS WHEN OPERATING AT THEIR MAXIMUM CAPACITY. RELIEF VALVES SHALL BE RATED ACCORDING TO ANSI Z21.22/CSA 4.4. RELIEF VALVES FOR SYSTEMS WHERE THE MAXIMUM RATE OF HEAT INPUT IS LESS THAN 200,000 BTUH SHALL HAVE 3/4 INCH MINIMUM INLETS, AND 3/4 INCH OUTLETS. RELIEF VALVES FOR SYSTEMS WHERE THE MAXIMUM RATE OF HEAT INPUT IS GREATER THAN 200,000 BTUH SHALL HAVE 1 INCH MINIMUM INLETS, AND 1 INCH OUTLETS. THE DISCHARGE PIPE FROM THE RELIEF VALVE SHALL BE THE SIZE OF THE VALVE OUTLET.

11. THERMOSTATIC MIXING VALVE: PROVIDE THERMOSTATIC MIXING VALVE FOR LAVATORY FAUCETS. MIXING VALVES, THERMOSTATIC TYPE, PRESSURE-BALANCED OR COMBINATION THERMOSTATIC AND PRESSURE-BALANCED SHALL BE LINE SIZE AND SHALL BE CONSTRUCTED WITH ROUGH OR FINISH BODIES EITHER WITH OR WITHOUT PLATING. EACH VALVE SHALL BE CONSTRUCTED TO CONTROL THE MIXING OF HOT AND COLD WATER AND TO DELIVER WATER AT A DESIRED TEMPERATURE REGARDLESS OF PRESSURE OR INPUT TEMPERATURE CHANGES. THE CONTROL ELEMENT SHALL BE OF AN APPROVED TYPE. THE BODY SHALL BE OF HEAVY CAST BRONZE, AND INTERIOR PARTS SHALL BE BRASS, BRONZE, CORROSION-RESISTING STEEL OR COPPER. THE VALVE SHALL BE EQUIPPED WITH NECESSARY STOPS, CHECK VALVES, UNIONS, AND SEDIMENT STRAINERS ON THE INLETS. MIXING VALVES SHALL MAINTAIN WATER TEMPERATURE WITHIN 5 DEGREES F OF ANY SETTING.

PLUMBING SCOPE OF WORK:

1. THIS PROJECT CONSISTS OF THE REMOVAL OF THE EXISTING HOT WATER SYSTEM. THE EXISTING HOT WATER SYSTEM INCLUDES 2 ELECTRIC HOT WATER HEATERS, 4 HOT WATER STORAGE TANKS, SOLAR HOT WATER PANELS, HOT WATER RETURN PUMP, CIRCULATING PUMP AND PIPING SERVING ALL EQUIPMENT UP TO THE PORS.
2. PROVIDE NEW WATER SOFTENING SYSTEM FOR THE HOT WATER SYSTEM. REPLACE EXISTING ELECTRIC TANK TYPE WATER HEATERS WITH NEW AIR-SOURCE HEAT PUMP, CIRCULATION PUMPS AND CONTROLS. PROVIDE NEW DOMESTIC HOT WATER EXPANSION TANK, HOT WATER RETURN PUMPS AND PIPING.
3. PROVIDE NEW SOLAR HOT WATER PANELS INCLUDING NEW PREHEAT STORAGE TANK, PUMPS, AND CONTROLS.
4. PROVIDE NEW THERMOSTATIC MIXING VALVE.
5. THREE NEW HOT WATER TANKS TO BE GOVERNMENT FURNISHED, TWO NEW HOT WATER TANKS TO BE CONTRACTOR PROVIDED.
6. PROVIDE NEW FLOOR DRAINAGE SYSTEM TO SERVICE HOT WATER SYSTEM EQUIPMENT.

PLUMBING LEGEND

SYMBOL	ABBRV.	DESCRIPTION
	AFF	ABOVE FINISHED FLOOR
	BV	BALL VALVE
	CW	COLD WATER
	COTG	CLEANOUT TO GRADE
	CONT	CONTINUE
	DN	DOWN
	EXIST.	EXISTING
	FCO	FLOOR CLEANOUT
	FD	FLOOR DRAIN
	FS	FLOOR SINK
	HW	HOT WATER
	HWR	HOT WATER RETURN
	LAV	LAVATORY
	NTS	NOT TO SINK
	POR	POINT OF REMOVAL
	POC	POINT OF CONNECTION
	S	SANITARY
	SS	SERVICE SINK
	SHWR	SHOWER
	TYP.	TYPICAL
	U/G	UNDERGROUND
	V	VENT PIPING
	VTR	VENT THRU ROOF
	WC	WATER CLOSET
	WCO	WALL CLEANOUT

REV NO.	SYM.	DESCRIPTION	SHT__ OF__	DATE	APPROVED: DOD ADMINISTRATOR

DERON A. JYO
LICENSED PROFESSIONAL ENGINEER
No. 11797-M
HAWAII, U.S.A.

This work was prepared by me or under my supervision, and construction of this project will be under my observation.

Signature — Expiration Date of the License: 4/30/2028

DEPARTMENT OF DEFENSE
STATE OF HAWAII

HAWAII ARMY NATIONAL GUARD
B1788 BOILER ROOM IMPROVEMENTS

KALAELOA, OAHU, HAWAII

BUILDING 1788
PLUMBING GENERAL NOTES AND LEGEND

MASON

DESIGNED BY: KW	CHECKED BY: DJ	JOB NO. CA-202610-C	DRAWING NO. P-001
DRAWN BY: AK	APPROVED BY: DJ	DATE AUG 2026	SHEET 11 OF 25 SHEETS
SCALE: AS NOTED			

FILE_____ DRAWER_____ FOLDER_____

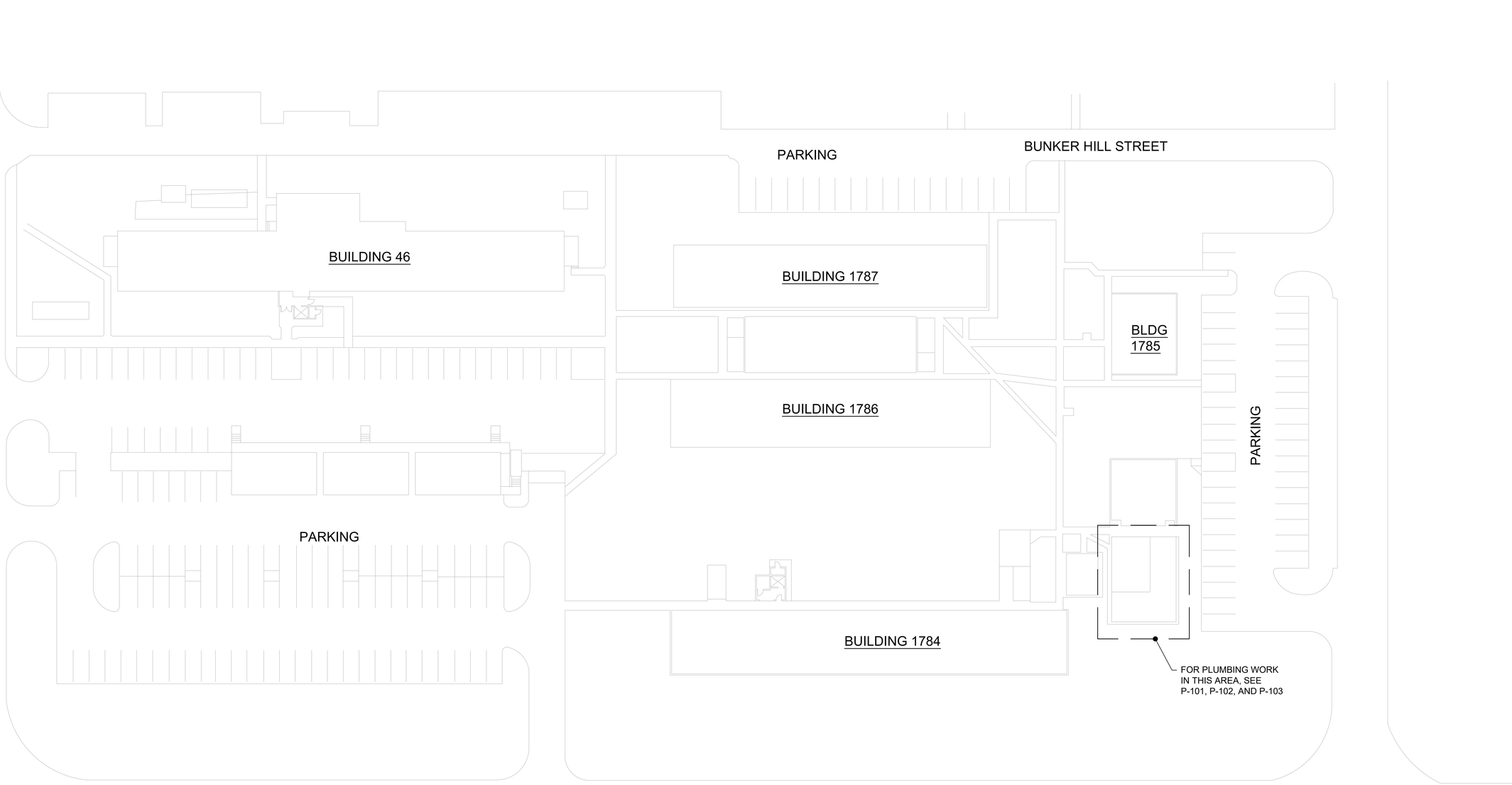

1 PLUMBING SITE PLAN
SCALE: 1" = 30'-0"

TRUE NORTH
PLAN NORTH

0 30' 60' 90'
SCALE: 1" = 30'

REV NO.	SYM.	DESCRIPTION	SHT__ OF___	DATE	APPROVED: DOD ADMINISTRATOR

DERON A. UYO
LICENSED PROFESSIONAL ENGINEER
No. 11797-M
HAWAII, U.S.A.

This work was prepared by me or under my supervision, and construction of this project will be under my observation.

Signature Expiration Date of the License 4/30/2028

DEPARTMENT OF DEFENSE
STATE OF HAWAII

HAWAII ARMY NATIONAL GUARD
B1788 BOILER ROOM IMPROVEMENTS

KALAELOA, OAHU, HAWAII

BUILDING 1788
PLUMBING SITE PLAN

MASON

DESIGNED BY:	CHECKED BY:	JOB NO.	DRAWING NO.
KW	DJ	CA-202610-C	P-002
DRAWN BY: AK	APPROVED BY: DJ	DATE	SHEET
SCALE: AS NOTED		AUG 2026	12 OF 25 SHEETS

FILE_____ DRAWER_____ FOLDER_____

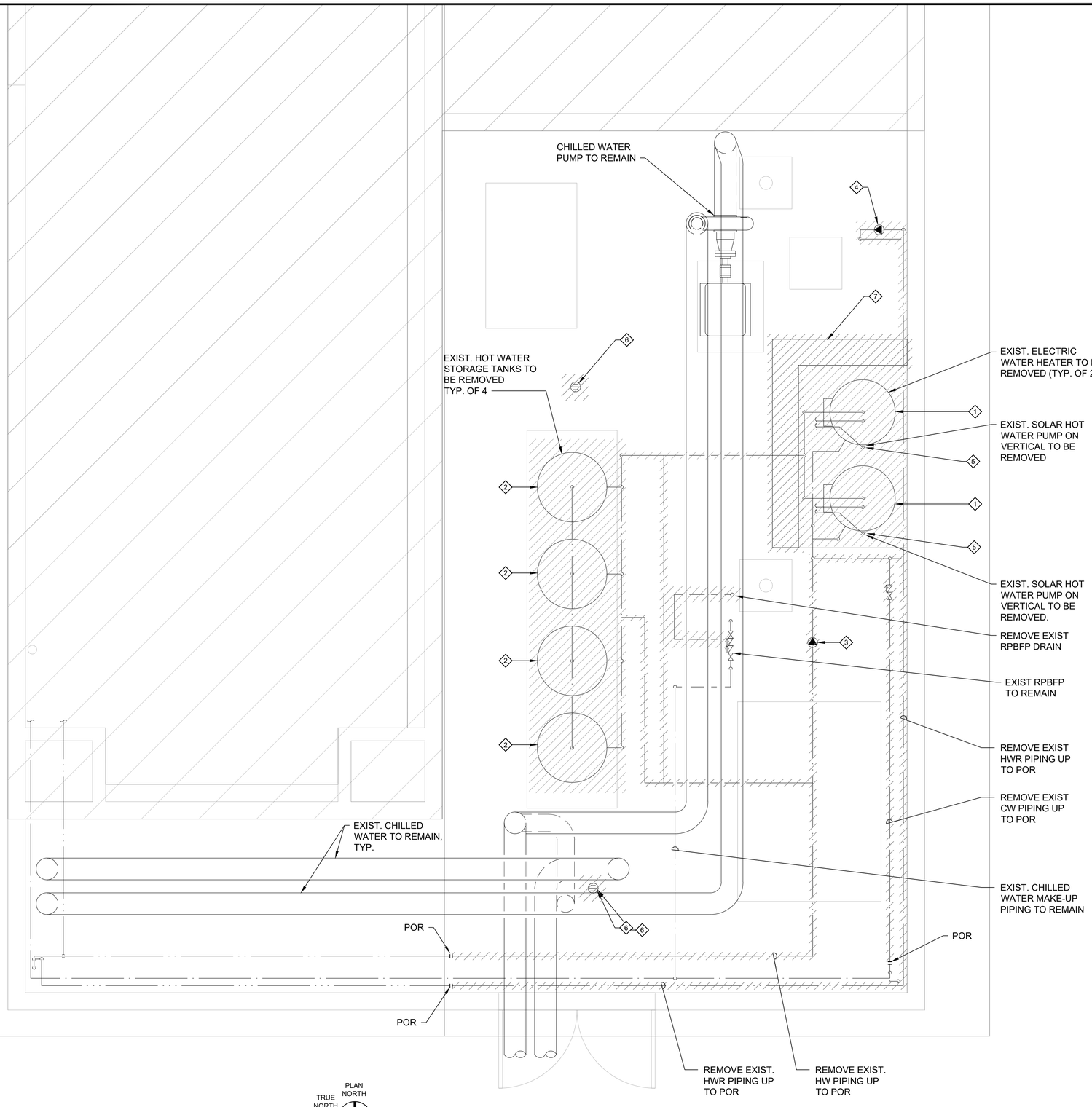

1 BUILDING 1788 PLUMBING PLAN - REMOVAL WORK
SCALE: 1/2" = 1'-0"

REMOVAL WORK KEY NOTES:

1. REMOVE EXISTING ELECTRIC WATER HEATER AND APPURTENANCES. REMOVE ALL EXISTING WATER PIPING UP TO POR'S
2. REMOVE EXISTING HOT WATER STORAGE TANK AND APPURTENANCES. REMOVE ALL WATER PIPING UP TO POR'S
3. REMOVE EXISTING HOT WATER CIRCULATING PUMP AND APPURTENANCES.
4. REMOVE EXISTING HOT WATER RETURN PUMP AND APPURTENANCES.
5. REMOVE EXISTING SOLAR HOT WATER PUMP AND APPURTENANCES. REMOVE EXISTING PIPING
6. REMOVE EXISTING FLOOR DRAIN AND APPURTENANCES. CAP PIPING BELOW SLAB. GROUT FILL AND PATCH TO MATCH EXISTING.
7. REMOVE EXISTING TRENCH DRAIN. CAP PIPING BELOW SLAB. GROUT FILL AND PATCH TO MATCH EXISTING.

REV NO.	SYM.	DESCRIPTION	SHT__ OF__	DATE	APPROVED: DOD ADMINISTRATOR

DERON A. JYO
LICENSED PROFESSIONAL ENGINEER
No. 11797-M
HAWAII, U.S.A.

This work was prepared by me or under my supervision, and construction of this project will be under my observation.

Signature — Expiration Date of the License: 4/30/2028

DEPARTMENT OF DEFENSE
STATE OF HAWAII

HAWAII ARMY NATIONAL GUARD
B1788 BOILER ROOM IMPROVEMENTS

KALAELOA, OAHU, HAWAII

BUILDING 1788
PLUMBING PLAN - REMOVAL WORK

MASON		JOB NO.	DRAWING NO.
DESIGNED BY: KW	CHECKED BY: DJ	CA-202610-C	P-101
DRAWN BY: AK	APPROVED BY: DJ	DATE: AUG 2026	SHEET 13 OF 25 SHEETS
SCALE: AS NOTED			

FILE_____ DRAWER_____ FOLDER_____

PLUMBING NEW WORK KEY NOTES (THIS SHEET ONLY):

1. REPAIR AND EXPAND EXISTING EQUIPMENT PAD AS NECESSARY TO ACCOMMODATE NEW EQUIPMENT
2. REPAIR EXISTING EQUIPMENT PAD AS NECESSARY TO ACCOMMODATE NEW EQUIPMENT
3. SOLAR HOT WATER PIPING UP TO SOLAR PANELS ON ROOF USING EXISTING HORIZONTAL PENETRATION

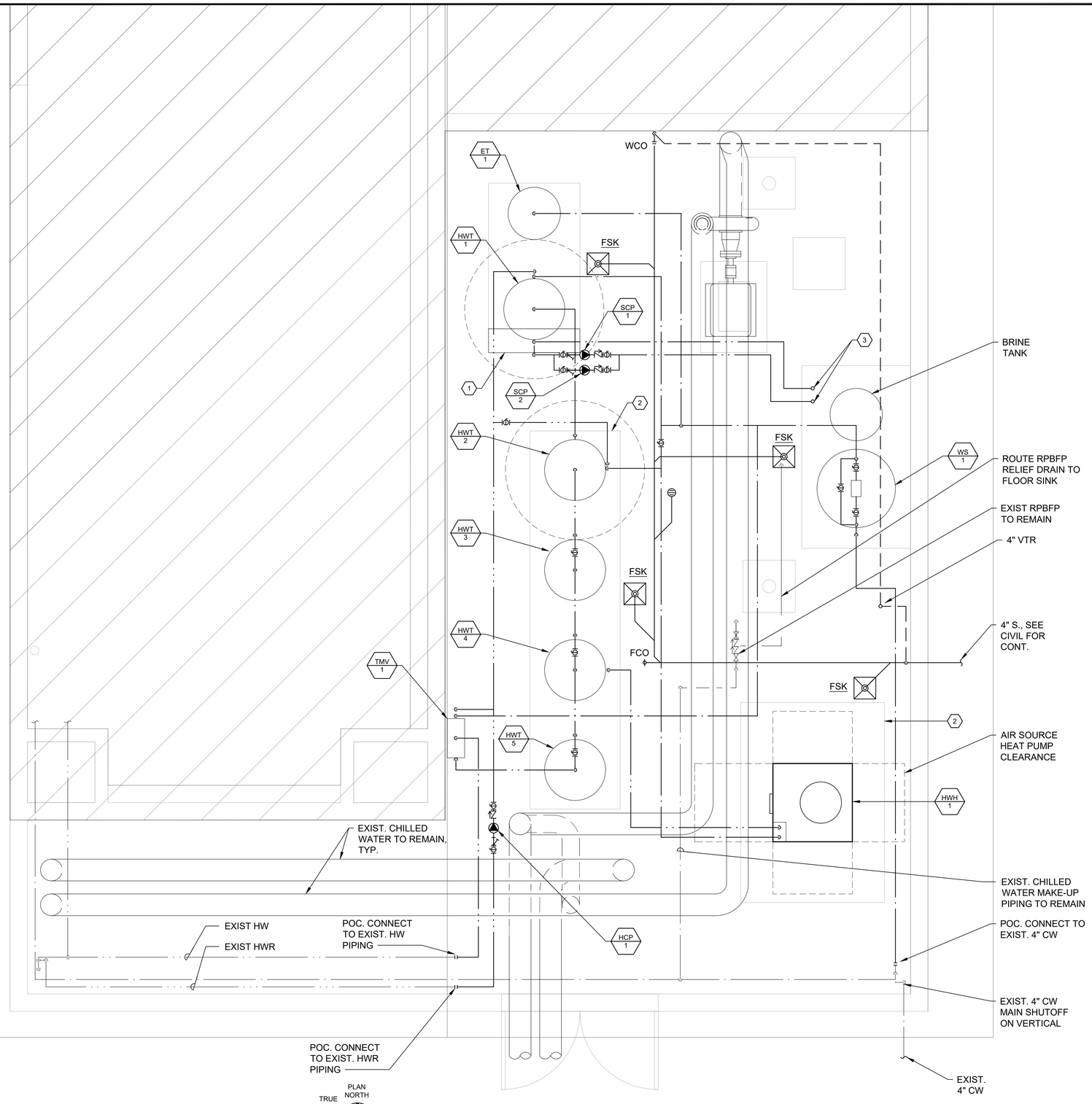

A1 PLUMBING PLAN - NEW WORK
SCALE: 1/2" = 1'-0"

REV NO.	SYM.	DESCRIPTION	SHT__ OF__	DATE	APPROVED: DOD ADMINISTRATOR

DERON A. JYO
LICENSED PROFESSIONAL ENGINEER
No. 11797-M
HAWAII, U.S.A.

This work was prepared by me or under my supervision, and construction of this project will be under my observation.

Signature — Expiration Date of the License: 4/30/2028

DEPARTMENT OF DEFENSE
STATE OF HAWAII

HAWAII ARMY NATIONAL GUARD
B1788 BOILER ROOM IMPROVEMENTS

KALAELOA, OAHU, HAWAII

BUILDING 1788
PLUMBING PLAN - NEW WORK

MASON		JOB NO.	DRAWING NO.
DESIGNED BY: KW	CHECKED BY: DJ	CA-202610-C	P-102
DRAWN BY: AK	APPROVED BY: DJ	DATE	SHEET
SCALE: AS NOTED		AUG 2026	14 OF 25 SHEETS

FILE_____ DRAWER_____ FOLDER_____

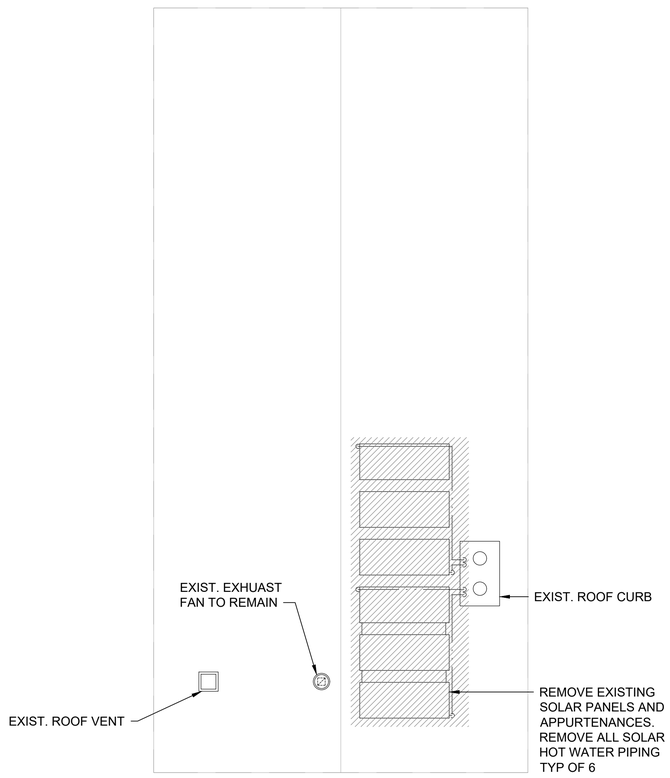

1 PLUMBING ROOF PLAN - REMOVAL WORK
SCALE: 1/8" = 1'-0"

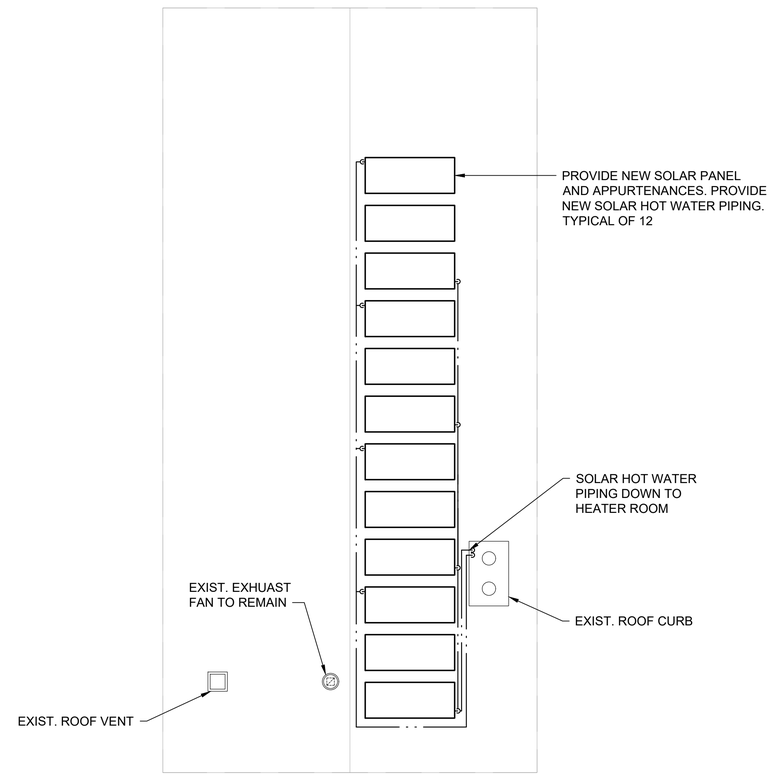

2 PLUMBING ROOF PLAN - NEW WORK
SCALE: 1/8" = 1'-0"

REV NO.	SYM.	DESCRIPTION	SHT.__ OF__	DATE	APPROVED: DOD ADMINISTRATOR

DERON A. JYO
LICENSED PROFESSIONAL ENGINEER
No. 11797-M
HAWAII, U.S.A.

This work was prepared by me or under my supervision, and construction of this project will be under my observation.

Signature — Expiration Date of the License: 4/30/2028

DEPARTMENT OF DEFENSE
STATE OF HAWAII

HAWAII ARMY NATIONAL GUARD
B1788 BOILER ROOM IMPROVEMENTS

KALAELOA, OAHU, HAWAII

BUILDING 1788
PLUMBING ROOF PLAN

MASON

DESIGNED BY:	CHECKED BY:	JOB NO.	DRAWING NO.
KW	DJ	CA-202610-C	P-103
DRAWN BY: AK	APPROVED BY: DJ	DATE	SHEET
SCALE: AS NOTED		AUG 2026	15 OF 25 SHEETS

FILE_____ DRAWER_____ FOLDER_____

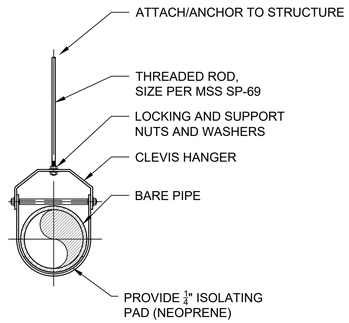

1 UN-INSULATED PIPE SUPPORT DETAIL
SCALE: NTS

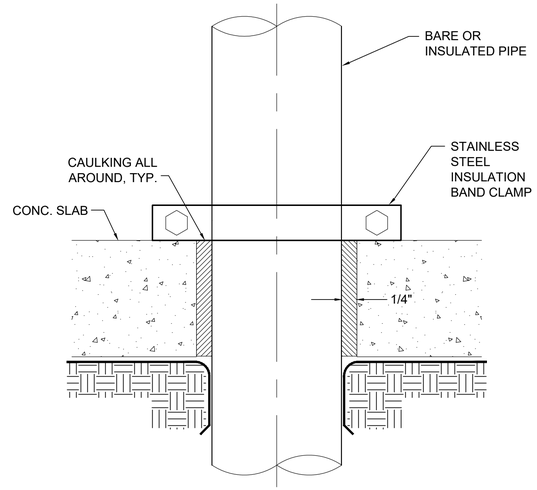

2 PIPE THRU SLAB ON GRADE DETAIL
SCALE: NTS

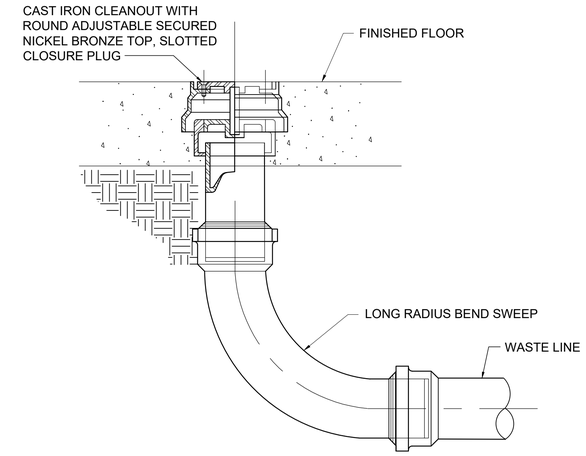

3 FLOOR CLEANOUT DETAIL
SCALE: NTS

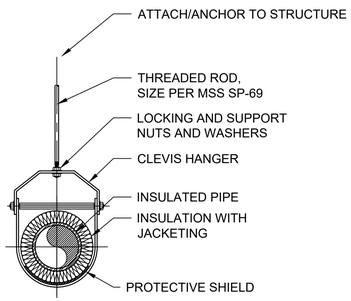

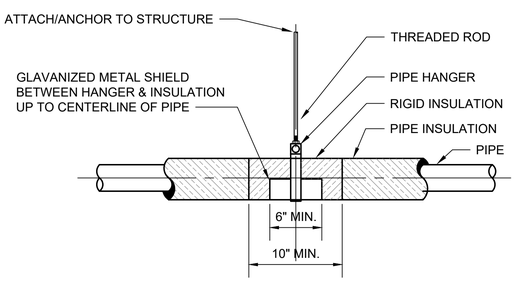

4 INSULATED PIPE SUPPORT DETAIL
SCALE: NTS

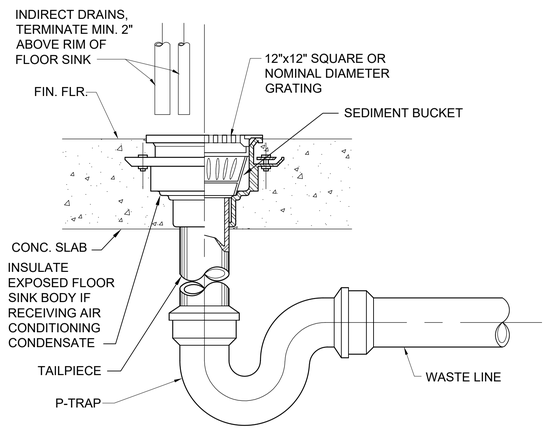

NOTE: 1. PROVIDE HALF GRATE FOR FLOOR SINKS RECEIVING INDIRECT WASTES, UNLESS OTHERWISE INDICATED.
2. SEE PLUMBING FIXTURE SCHEDULE FOR FLOOR SINK TYPES.

5 FLOOR SINK DETAIL
SCALE: NTS

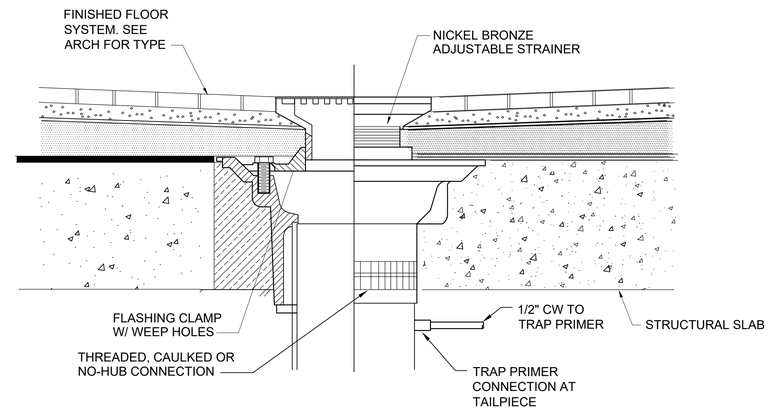

6 FLOOR DRAIN DETAIL
SCALE: NTS

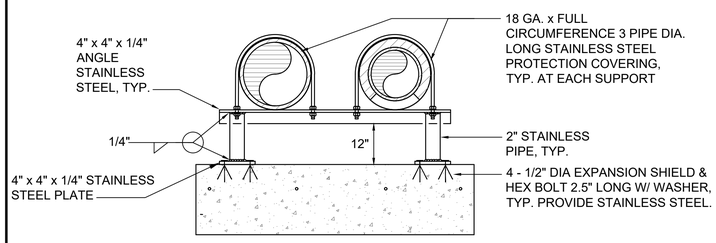

7 ROOF PIPING SUPPORT DETAIL
SCALE: NTS

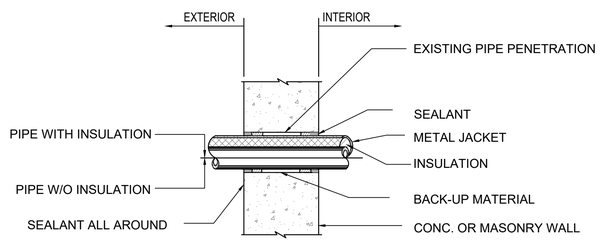

8 PIPE PENETRATION DETAIL
SCALE: N.T.S.

REV NO.	SYM.	DESCRIPTION	SHT__ OF__	DATE	APPROVED: DOD ADMINISTRATOR

DERON A. JYO
LICENSED PROFESSIONAL ENGINEER
No. 11797-M
HAWAII, U.S.A.

This work was prepared by me or under my supervision, and construction of this project will be under my observation.

Signature — Expiration Date of the License: 4/30/2028

DEPARTMENT OF DEFENSE
STATE OF HAWAII

HAWAII ARMY NATIONAL GUARD
B1788 BOILER ROOM IMPROVEMENTS

KALAELOA, OAHU, HAWAII

BUILDING 1788
PLUMBING DETAILS

MASON

DESIGNED BY: KW	CHECKED BY: DJ	JOB NO. CA-202610-C	DRAWING NO. P-501
DRAWN BY: AK	APPROVED BY: DJ	DATE AUG 2026	SHEET 16 OF 25 SHEETS
SCALE: AS NOTED			

FILE_____ DRAWER_____ FOLDER_____

AIR SOURCE HEAT PUMP SCHEDULE

UNIT	TYPE	SERVICE	MIN. HEATING CAPACITY (MBH)	EVAPORATOR	CONDENSER		ELECTRICAL					MIN. COP	OPER. WEIGHT (LBS)	REMARKS
				AMBIENT AIR (F)	ENT/LVG (F)	GPM	RLA	MOP	V	PH	HZ			
HWH-1	AIR COOLED HEAT PUMP	DOMESTIC HOT WATER	110	75	70/140	3.1	35	50	208	3	60	4.5	700	PROVIDE INTEGRAL CIRCULATION PUMP

HOT WATER STORAGE TANK SCHEDULE

UNIT	TYPE	SERVICE	CAPACITY (GAL)	DIMENSIONS		REMARKS
				DIAMETER (IN)	HEIGHT (IN)	
HWT-1	VERTICAL	SOLAR SYSTEM / DOMESTIC HOT WATER	175	28	5'-8"	CONTRACTOR FURNISHED, CONTRACTOR INSTALLED
HWT-2	VERTICAL	DOMESTIC HOT WATER	175	28	5'-8"	CONTRACTOR FURNISHED, CONTRACTOR INSTALLED
HWT-3	VERTICAL	DOMESTIC HOT WATER	175	28	5'-8"	GOVERNMENT FURNISHED, CONTRACTOR INSTALLED
HWT-4	VERTICAL	DOMESTIC HOT WATER	175	28	5'-8"	GOVERNMENT FURNISHED, CONTRACTOR INSTALLED
HWT-5	VERTICAL	DOMESTIC HOT WATER	175	28	5'-8"	GOVERNMENT FURNISHED, CONTRACTOR INSTALLED

CIRCULATING PUMP SCHEDULE

UNIT	TYPE	SERVICE	GPM	TDH (FT.)	ELECTRICAL				REMARKS
					HP	V	PH	HZ	
HCP-1	CIRCULATION PUMP	DOMESTIC HOT WATER RECIRCULATING SYSTEM	10	35	1/2	120	1	60	RATED FOR DOMESTIC WATER SERVICE
SCP-1	CIRCULATION PUMP	SOLAR HOT WATER SYSTEM	5	25	1/4	120	1	60	RATED FOR DOMESTIC WATER SERVICE
SCP-2	CIRCULATION PUMP	SOLAR HOT WATER SYSTEM	5	25	1/4	120	1	60	RATED FOR DOMESTIC WATER SERVICE

SOLAR PANEL SCHEDULE

QTY	COLLECTOR NOMINAL DIMENSION (FT)	MIN. COLLECTOR OUTPUT (BTUH/DAY)	STORAGE TANK	REMARKS
SP-1	4X8	1070	HWT-1	TYPICAL FOR 12

EXPANSION TANK SCHEDULE

UNIT	SYSTEM SERVED	TANK VOLUME (GAL)	ACCEPTANCE CAPACITY (GAL)	MAX WORKING PRESSURE (PSI)	DIMENSIONS		REMARKS
					HEIGHT (IN)	DIAMETER (IN)	
ET-1	DOMESTIC HOT WATER	112	56	150	77	24	BLADDER TYPE, ASME CODE STAMPED, PRE-CHARGE TO 60 PSI

THERMOSTATIC MIXING VALVE (TMV) SCHEDULE

UNIT	SYSTEM SERVED	SET POINT (°F)	MAX OPERATING PRESSURE (PSI)	MIN FLOW CAPACITY (GPM)	FLOW CAPACITY @ 5 PSI PRESSURE DROP (GPM)	INLET DIAMETER (IN)			HOT WATER OUTLET DIAMETER (IN)	REMARK
						COLD WATER (IN)	140 F HOT WATER (IN)	HOT WATER RETURN (IN)		
TMV-1	DOMESTIC HOT WATER	120	200	0.5	40	2"	2"	3/4"	2"	

WATER SOFTNER (WS) SCHEDULE

UNIT	SYSTEM SERVED	TYPE	CAPACITY (GAL)	MAX FLOWRATE (GPM)	TANK (QTY)	BRINE TANKS (QTY)	OVERALL SIZE (LxWxH)	OPERATING WEIGHT (LBS)	REMARK
WS-1	DOMESTIC HOT WATER	MULTIPLEX ION EXCHANGE TANK	142	42	1	1	27"x39"x60"	1430	SINGLE SYSTEM CONTROLLER. FURNISH WITH ELECTRONIC BUTTERFLY CONTROL VALVE, 120V, METERED SYSTEM, BRINE SAFETY VALVE, POLYETHENE BRINE TANKS

REV NO.	SYM.	DESCRIPTION	SHT__ OF__	DATE	APPROVED: DOD ADMINISTRATOR

DERON A. JYO
LICENSED PROFESSIONAL ENGINEER
No. 11797-M
HAWAII, U.S.A.

This work was prepared by me or under my supervision, and construction of this project will be under my observation.

Signature — Expiration Date of the License: 4/30/2028

DEPARTMENT OF DEFENSE
STATE OF HAWAII

HAWAII ARMY NATIONAL GUARD
B1788 BOILER ROOM IMPROVEMENTS

KALAELOA, OAHU, HAWAII

BUILDING 1788
PLUMBING SCHEDULES

MASON

DESIGNED BY:	CHECKED BY:	JOB NO.	DRAWING NO.
KW	DJ	CA-202610-C	P-601
DRAWN BY: AK	APPROVED BY: DJ	DATE: AUG 2026	SHEET 17 OF 25 SHEETS
SCALE: AS NOTED			

FILE_____ DRAWER_____ FOLDER_____

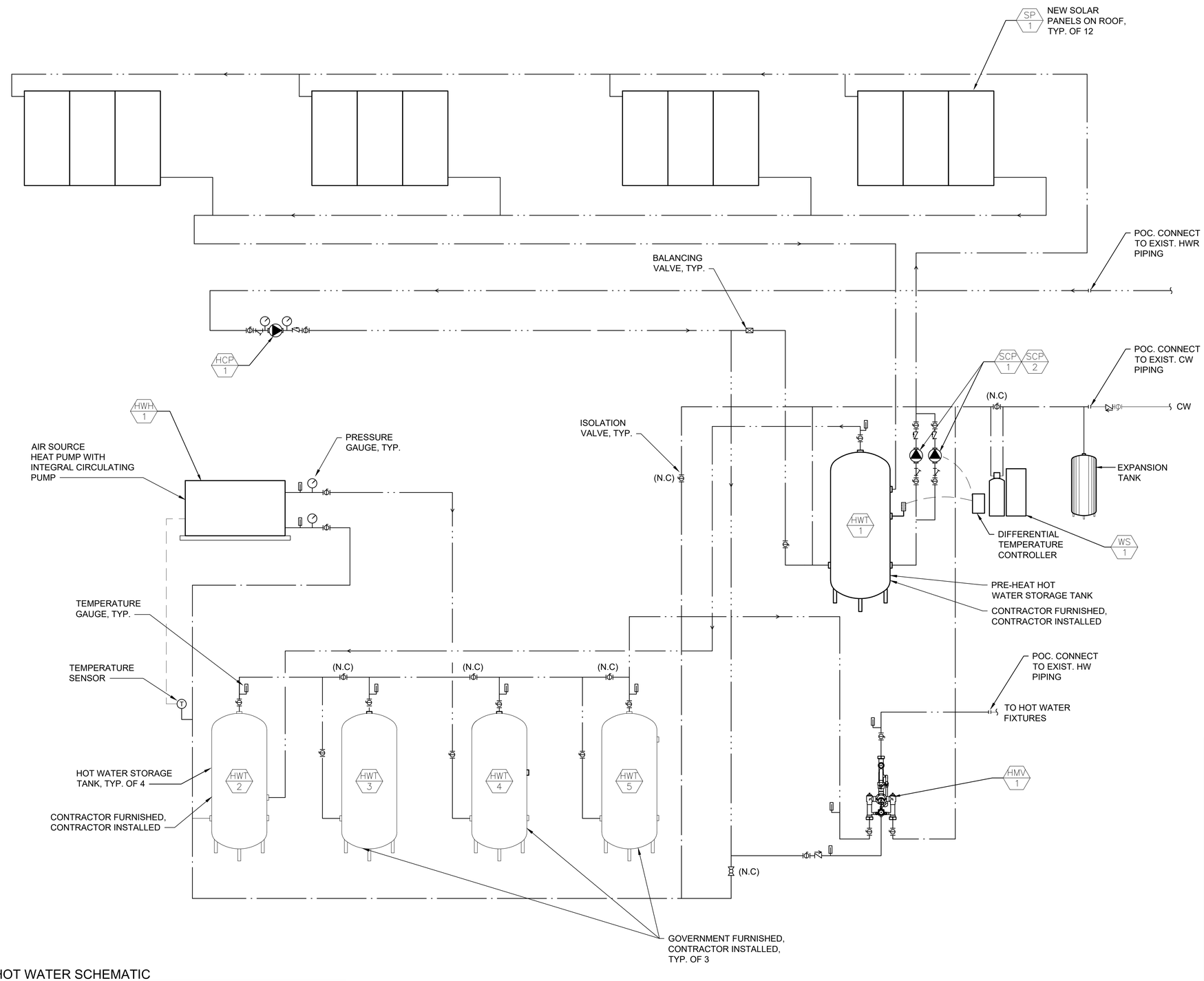

1 HOT WATER SCHEMATIC
SCALE: NTS

REV NO.	SYM.	DESCRIPTION	SHT__ OF__	DATE	APPROVED: DOD ADMINISTRATOR

DERON A. ITO
LICENSED PROFESSIONAL ENGINEER
No. 11797-M
HAWAII, U.S.A.

This work was prepared by me or under my supervision, and construction of this project will be under my observation.

Signature — Expiration Date of the License: 4/30/2028

DEPARTMENT OF DEFENSE
STATE OF HAWAII

HAWAII ARMY NATIONAL GUARD
B1788 BOILER ROOM IMPROVEMENTS

KALAELOA, OAHU, HAWAII

BUILDING 1788
HOT WATER SCHEMATIC

MASON		JOB NO.	DRAWING NO.
DESIGNED BY: KW	CHECKED BY: DJ	CA-202610-C	P-701
DRAWN BY: AK	APPROVED BY: DJ	DATE	SHEET
SCALE: AS NOTED		AUG 2026	18 OF 25 SHEETS

FILE_____ DRAWER_____ FOLDER_____

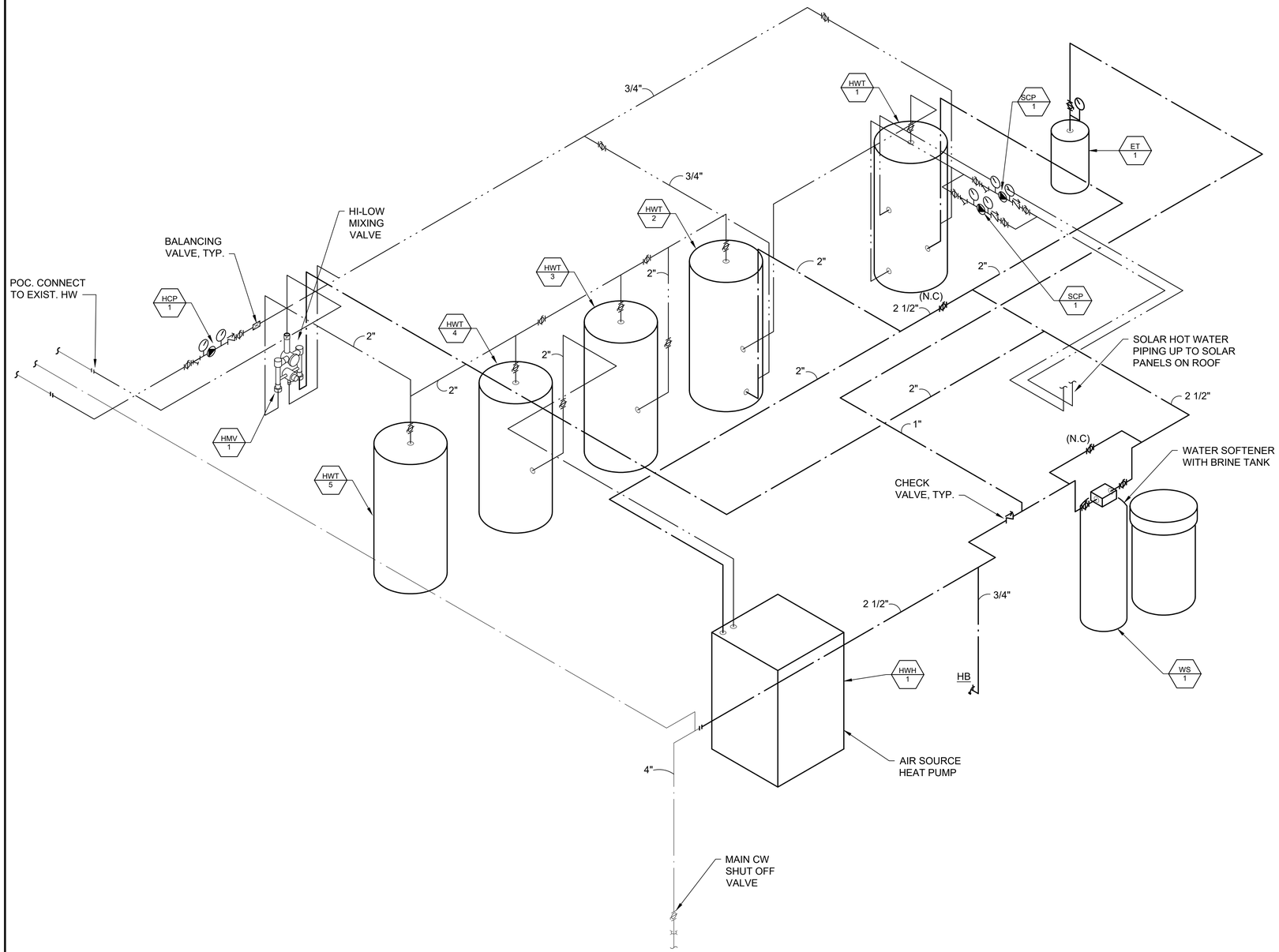

1 WATER PIPING ISOMETRIC
SCALE: NTS

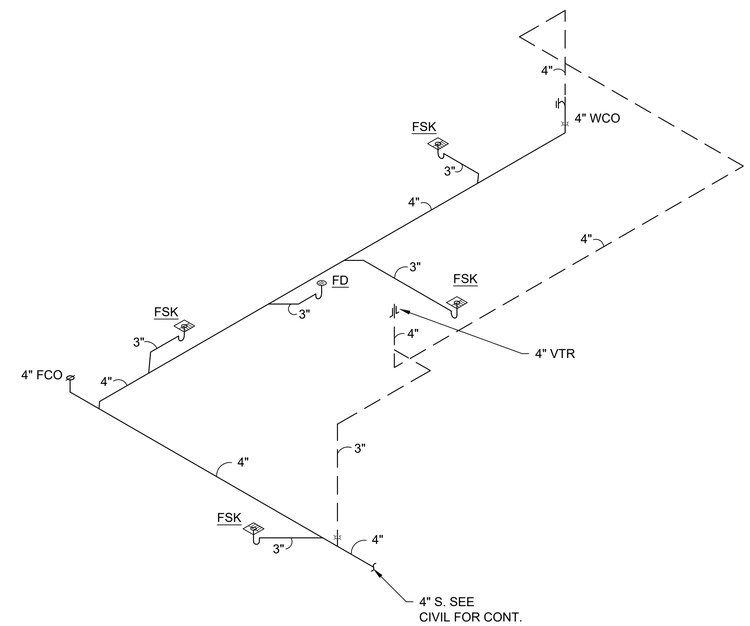

2 SANITARY PIPING ISOMETRIC
SCALE: NTS

REV NO.	SYM.	DESCRIPTION	SHT.__ OF___	DATE	APPROVED: DOD ADMINISTRATOR

DERON A. JYO
LICENSED PROFESSIONAL ENGINEER
No. 11797-M
HAWAII, U.S.A.

This work was prepared by me or under my supervision, and construction of this project will be under my observation.

Signature — Expiration Date of the License: 4/30/2028

T DEPARTMENT OF DEFENSE
STATE OF HAWAII

HAWAII ARMY NATIONAL GUARD
B1788 BOILER ROOM IMPROVEMENTS

KALAELOA, OAHU, HAWAII

BUILDING 1788
HOT WATER PIPING ISOMETRIC

MASON		JOB NO.	DRAWING NO.
DESIGNED BY: KW	CHECKED BY: DJ	CA-202610-C	P-901
DRAWN BY: AK	APPROVED BY: DJ	DATE: AUG 2026	SHEET 19 OF 25 SHEETS
SCALE: AS NOTED			

FILE_____ DRAWER_____ FOLDER_____

ELECTRICAL GENERAL NOTES AND SPECIFICATIONS:

1. ALL WORK SHOWN ON THE ELECTRICAL DRAWINGS IS NEW UNLESS OTHERWISE NOTED. ALL MATERIALS SHALL BE NEW AND "LISTED" OR "LABELED" AS DEFINED BY THE NATIONAL ELECTRICAL CODE (NEC). WORK INCLUDES INSTALLATION OF ALL ELECTRICAL SYSTEMS COMPLETE AND OPERATIONAL AS LIMITED BY THE INTENT OF THE CONTRACT DOCUMENTS.
2. ALL WORK SHALL COMPLY WITH THE NATIONAL ELECTRICAL CODE (NEC), NATIONAL ELECTRICAL SAFETY CODE, AND THE UNIFIED FACILITIES CRITERIA STANDARDS. CONSTRUCTION PRACTICES SHALL CONFORM TO THE LATEST EDITION OF AMERICAN ELECTRICIANS' HANDBOOK BY CROFT AND APPLICABLE INSTRUCTIONS OF MANUFACTURERS OF EQUIPMENT AND MATERIAL SUPPLIED FOR THIS PROJECT.
3. STRUCTURES UNDERGOING CONSTRUCTION, ALTERATION, OR DEMOLITION OPERATIONS, INCLUDING THOSE IN UNDERGROUND LOCATIONS, SHALL COMPLY WITH NFPA 241, STANDARD FOR SAFEGUARDING CONSTRUCTION, ALTERATION, AND DEMOLITION OPERATIONS, AND NFPA 1.
4. FIRE SAFETY DURING ALTERATION:
   a. NFPA 1, 16.4.4.1 WHERE THE BUILDING IS PROTECTED BY FIRE PROTECTION SYSTEMS, SUCH SYSTEMS SHALL BE MAINTAINED OPERATIONAL AT ALL TIMES DURING ALTERATION.
   b. NFPA 1, 16.4.4.2 WHERE ALTERATION REQUIRES MODIFICATION OF A PORTION OF THE FIRE PROTECTION SYSTEM, THE REMAINDER OF THE SYSTEM SHALL BE KEPT IN SERVICE AND THE FIRE DEPARTMENT SHALL BE NOTIFIED.
   c. NFPA 1, 16.4.4.3 WHEN IT IS NECESSARY TO SHUT DOWN THE SYSTEM, THE AHJ SHALL HAVE THE AUTHORITY TO REQUIRE ALTERNATE MEASURES OF PROTECTION UNTIL THE SYSTEM IS RETURNED TO SERVICE.
   d. NFPA 1, 10.7.1.1 AS NECESSARY DURING EMERGENCIES, MAINTENANCE, DRILLS, PRESCRIBED TESTING, ALTERATIONS, OR RENOVATIONS, PORTABLE OR FIXED FIRE-EXTINGUISHING SYSTEMS OR DEVICES OR ANY FIRE-WARNING SYSTEM SHALL BE PERMITTED TO BE MADE INOPERATIVE OR INACCESSIBLE. A FIRE WATCH SHALL BE REQUIRED AS SPECIFIED IN SECTIONS 13.3.3.6.5.2(4)(b), 13.7.1.5.3, 16.5.4, 34.6.3.3, 41.2.2.6, 41.2.2.7, 41.2.4, 41.3.5, 41.4.1, 34.5.4.3, AND 25.1.8 AT NO COST TO THE AHJ. NFPA 1.
5. THE DRAWINGS DO NOT REFLECT ALL THE EXISTING CONDITIONS THAT MAY BE ENCOUNTERED DURING CONSTRUCTION. VISIT THE PROJECT SITE AND BECOME FAMILIAR WITH THE READILY OBSERVABLE EXISTING CONDITIONS, THE EXTENT OF ANY DEMOLITION, RELOCATION, RECONNECTION, AND THE NEW WORK PRIOR TO BIDDING. REPORT ANY READILY OBSERVABLE DISCREPANCIES AND/OR DIFFERENCES BETWEEN THE EXISTING CONDITIONS AND THE CONSTRUCTION DOCUMENTS TO THE CONTRACTING OFFICER. RESOLVE ALL READILY OBSERVABLE DISCREPANCIES AND QUESTIONS PRIOR TO THE START OF WORK. BID SUBMISSION SHALL BE CONSIDERED AS EVIDENCE THAT THE CONTRACTOR HAS VISITED THE SITE AND RESOLVED ALL READILY OBSERVABLE DISCREPANCIES AND QUESTIONS AND NO EXTRA PAYMENT WILL BE AUTHORIZED FOR WORK REQUIRED BY THE CONTRACTOR'S FAILURE TO DO SO.
6. PHASING AND SEQUENCING OF THE ELECTRICAL WORK WILL BE REQUIRED. COORDINATE ALL ELECTRICAL WORK WITH THE WORK OF THE OTHER TRADES AND SCHEDULE WORK TO MINIMIZE THE NUMBER AND DURATION OF ELECTRICAL OUTAGES AND IMPACT TO THE OPERATIONS IN OR ADJACENT TO THE PROJECT AREA. COORDINATE ACCESS TO THE PROJECT AREA AND SCHEDULE ALL REQUIRED SYSTEM OUTAGES WITH THE CONTRACTING OFFICER.
7. VERIFY AND COORDINATE ALL PENETRATIONS PRIOR TO THE START OF CONSTRUCTION. OBTAIN APPROVAL BEFORE MAKING ANY PENETRATIONS THROUGH STRUCTURAL MEMBERS OR FIRE RATED WALLS AND CEILINGS.
8. EXISTING DEVICE AND EQUIPMENT LOCATIONS, CIRCUIT ASSIGNMENTS, WIRING CONNECTIONS, AND CONDUIT RUNS INDICATED WERE DERIVED FROM AVAILABLE REFERENCE DOCUMENTS AND LIMITED FIELD INVESTIGATION. FIELD VERIFY ALL EXISTING CONDITIONS AND MAKE ANY NECESSARY ADJUSTMENTS TO SATISFY THE INTENT OF THE DRAWINGS AND SPECIFICATIONS.
9. RE-ROUTE ALL EXISTING CONDUIT, WIRING, AND CABLING TO REMAIN WITHIN THE PROJECT AREA AS NECESSARY TO FACILITATE THE REMOVAL OF EXISTING EQUIPMENT AS WELL AS THE INSTALLATION OF ALL NEW EQUIPMENT. REMOVE AND RE-INSTALL ELECTRICAL EQUIPMENT, INCLUDING LIGHTS, TO REMAIN AS REQUIRED.
10. WORK INCIDENTAL TO THE CONTRACT AND NECESSARY TO COMPLETE THE PROJECT, ALTHOUGH NOT SPECIFICALLY REFERRED TO IN THE CONTRACT DOCUMENTS, SHALL BE FURNISHED AND PERFORMED BY THE CONTRACTOR AT NO ADDITIONAL COST TO THE PROJECT. AN EXAMPLE OF SUCH INCIDENTAL WORK ARE OUTLET BOXES, JUNCTION BOXES, AND PULL BOXES REQUIRED FOR THE INSTALLATION OF ELECTRICAL DEVICES, LIGHTING FIXTURES, AND EQUIPMENT. ALL INCIDENTAL WORK SHALL BE FURNISHED AND INSTALLED IN ACCORDANCE WITH THE NEC.
11. ELECTRICAL CONTRACTOR SHALL BE RESPONSIBLE TO PROVIDE ALL CONDUIT AND WIRING FOR THE POWER CONNECTION TO ALL EQUIPMENT AS INDICATED IN THE DRAWINGS AND SPECIFICATIONS. ALL INCIDENTAL CONDUIT AND WIRING REQUIRED FOR A COMPLETE AND OPERATIONAL SYSTEM MAY NOT BE SHOWN IN THE DRAWINGS OR SPECIFICATIONS. CONTRACTOR SHALL COORDINATE INCIDENTAL CONDUIT AND WIRING REQUIREMENTS BETWEEN ALL TRADES TO ENSURE THE INCIDENTAL CONDUIT AND WIRING IS PROVIDED AND THE AFFECTED SYSTEMS OPERATE AS INTENDED.
12. THE LOCATION OF ALL ELECTRICAL APPARATUS AND DEVICES SHOWN ON THE DRAWINGS ARE APPROXIMATE AND BEFORE INSTALLING, STUDY THE ARCHITECTURAL, STRUCTURAL, AND MECHANICAL DETAILS, THEN MAKE INSTALLATION IN THE MOST LOGICAL MANNER. CIRCUIT ROUTING IS TYPICAL AND MAY BE VARIED IN ANY MANNER. ANY PIECE OF EQUIPMENT/DEVICE MAY BE RELOCATED WITHIN 10' BEFORE INSTALLATION AT THE DIRECTION OF THE CONTRACTING OFFICER WITHOUT ADDITIONAL CHARGE TO THE PROJECT.
13. SHOULD PROJECT CONDITIONS REQUIRE REARRANGEMENT OF THE PROJECT'S WORK, THE CONTRACTOR SHALL MARK SUCH CHANGES ON THE AS-BUILT DRAWINGS. IF THESE CHANGES REQUIRE AN ALTERNATE METHOD TO THOSE SPECIFIED IN THE CONTRACT DOCUMENTS, THE CONTRACTOR SHALL SUBMIT DRAWINGS TO REFLECT THE PROPOSED ALTERNATE METHODS TO THE CONTRACTING OFFICER FOR REVIEW AND APPROVAL. THE CONTRACTOR SHALL NOT PROCEED UNTIL APPROVAL IS OBTAINED. REARRANGEMENT OF WORK FOR THE PURPOSE OF COORDINATION SHALL NOT BE CONSIDERED AN ITEM FOR EXTRA COST.

ELECTRICAL GENERAL NOTES AND SPECIFICATIONS (CONTINUED)

14. THE EXISTING ELECTRICAL, TELECOM, FIRE ALARM, AND OTHER ELECTRICALLY-RELATED SYSTEMS IN AREAS ADJACENT TO, OUTSIDE OF, AND/OR OTHERWISE PASSING THROUGH THE PROJECT LIMITS, MUST REMAIN OPERATIONAL DURING THE CONSTRUCTION PERIOD AND POST-CONSTRUCTION. THE CONTRACTOR SHALL EXERCISE DUE CARE AND CAUTION WHEN WORKING NEAR ANY EXISTING EQUIPMENT, DEVICES, OR CABLING/CIRCUITING. PROVIDE NEW JUNCTION BOXES, CONDUITS, WIRING, AND THE LABOR REQUIRED TO FACILITATE THE REQUIRED OPERATIONAL CONTINUITY. BOXES, CONDUITS, AND WIRING SHALL BE IN ACCORDANCE WITH THE NEC. ANY DAMAGE TO THE EXISTING EQUIPMENT, DEVICES, OR CABLING/CIRCUITING RESULTING FROM THE CONTRACTOR'S OPERATIONS SHALL BE IMMEDIATELY REPAIRED OR OTHERWISE RESTORED TO ITS ORIGINAL WORKING CONDITION AT NO ADDITIONAL COST TO THE PROJECT.
15. THE ELECTRICAL DRAWINGS ARE BASED ON PROPOSED EQUIPMENT. VERIFY ALL SYSTEM REQUIREMENTS (ELECTRICAL, MECHANICAL, ETC.) WITH THE SELECTED SYSTEM'S MANUFACTURER OR AUTHORIZED REPRESENTATIVE PRIOR TO COMMENCING WITH ANY WORK. COORDINATE RATINGS OF OVERCURRENT PROTECTION DEVICES, DISCONNECT SWITCHES, CONDUIT, AND WIRING TO MATCH THE ACTUAL EQUIPMENT SUPPLIED FOR THE PROJECT. CORRECT ALL DISCREPANCIES SO AS TO PROVIDE A COMPLETE AND OPERATIONAL SYSTEM. RECORD CHANGES ON THE AS-BUILT DRAWINGS.
16. ALL EQUIPMENT AND APPARATUS SHALL BE CAPABLE OF FITTING IN THE SPACES SHOWN WHILE MEETING THE MANUFACTURER'S RECOMMENDED ACCESS REQUIREMENTS AND APPLICABLE CODE REQUIREMENTS. REVIEW ALL SPACES WHERE EQUIPMENT IS TO BE INSTALLED PRIOR TO ORDERING OF EQUIPMENT AND NOTIFY THE CONTRACTING OFFICER OF ANY INADEQUATE CLEARANCES OR CONDITIONS THAT WILL PREVENT THE PROPER INSTALLATION, MAINTENANCE, AND OPERATION OF THE EQUIPMENT.
17. ALL EXPOSED CONDUITS IN FINISHED AREAS SHALL BE INSTALLED IN THE LEAST VISIBLE LOCATIONS. CARE SHALL BE TAKEN TO INSTALL CONDUIT IN THE MOST AESTHETICALLY PLEASING MANNER.
18. WHERE DEVICES, EQUIPMENT, BOXES, AND OTHER ELECTRICAL MATERIALS ARE INDICATED TO BE OF WEATHERPROOF (WP) CONSTRUCTION, THE INTERCONNECTING RACEWAYS, INCLUDING COUPLINGS AND CONNECTORS, SHALL BE LISTED FOR AND INSTALLED TO PROVIDE A COMPLETE WEATHERPROOF / WET LOCATION INSTALLATION. ALL INCIDENTAL MATERIALS REQUIRED TO COMPLETE THE INSTALLATION SHALL ALSO BE OF WEATHERPROOF / WET LOCATION LISTING.
19. PROVIDE TYPEWRITTEN CIRCUIT DIRECTORIES FOR ALL PANELS, NEW OR MODIFIED, REFLECTING THE CIRCUIT ARRANGEMENTS AS THEY WERE ACTUALLY INSTALLED.
20. AN ADHESIVE VINYL NAMEPLATE SHALL BE PROVIDED FOR ALL SWITCHES, RECEPTACLES, DISCONNECT SWITCHES, MOTOR STARTERS, AND MISCELLANEOUS DEVICES REQUIRING POWER. THE NAMEPLATE SHALL INDICATE THE PANELBOARD SERVING THE DEVICE AND THE CORRESPONDING CIRCUIT ASSIGNMENT. LETTERING SHALL BE A MINIMUM OF 1/4" HIGH. UTILIZE BROTHER "P-TOUCH" LABEL MAKER OR APPROVED SUBSTITUTE.
21. A GREEN, EQUIPMENT GROUND CONDUCTOR SIZED IN ACCORDANCE WITH THE NEC ARTICLE 250 SHALL BE INSTALLED IN ALL FEEDER AND BRANCH CIRCUITS WHETHER INDICATED ON CONTRACT DRAWINGS OR NOT. INSTALL THIS CONDUCTOR IN ALL RACEWAYS INCLUDING THOSE INSTALLED FOR SWITCH LEGS AND ATTACH TO THE DEVICE, LUMINAIRE, OR EQUIPMENT USING A SUITABLE GROUNDING LUG.
22. DO NOT USE A COMMON NEUTRAL FOR MULTIPLE BRANCH CIRCUITS INSTALLED IN A COMMON CONDUIT. PROVIDE A DEDICATED NEUTRAL FOR EACH INDIVIDUAL CIRCUIT. WHERE MULTIPLE DEDICATED NEUTRALS ARE INSTALLED IN A COMMON CONDUIT, PROVIDE COLOR CODING OF THE DIFFERENT NEUTRAL CONDUCTORS IN ACCORDANCE WITH THE NEC (WHITE, GRAY, THREE CONTINUOUS WHITE OR GRAY STRIPES, ETC.)
23. PROVIDE NYLON PULLSTRINGS IN ALL EMPTY CONDUITS UNLESS OTHERWISE INDICATED.
24. ALL SURFACE MOUNTED DEVICES SHALL BE INSTALLED UTILIZING FACTORY PAINTED SURFACE MOUNTING ACCESSORIES AND MATCHING DEVICE BOXES FOR THE MOST AESTHETICALLY PLEASING INSTALLATION.
25. PROVIDE KNOCK-OUT PLUGS FOR ALL UNUSED CONDUIT PENETRATIONS IN BOXES AND ENCLOSURES DUE TO CONDUIT REMOVAL.
26. PENETRATIONS THROUGH FIRE-RATED WALLS, CEILINGS, AND FLOORS SHALL BE SEALED TO MAINTAIN FIRE RATINGS. UTILIZE 3M CP25, PUTTY 303, OR OTHER SUITABLE UL-LISTED SEALING SYSTEM.
27. PATCH, REFINISH, AND PAINT ALL PENETRATIONS THROUGH WALLS AND SLABS TO MATCH FINISH OF ADJACENT SURFACES.
28. RESTORE/REPAIR ANY DAMAGE TO EXISTING SURFACES RESULTING FROM THE INSTALLATION OF NEW ELECTRICAL ITEMS. THE AREAS REPAIRED SHALL MATCH THE ADJACENT SURFACES IN TEXTURE, FINISH, AND COLOR.
29. PAINTING OF ELECTRICAL EQUIPMENT:
   a. INTERIOR LOCATIONS - PRIME AND PAINT ALL EXPOSED CONDUITS, BOXES, FITTINGS, SUPPORT CHANNELS, MOUNTING HARDWARE, AND ACCESSORIES WITH TWO FINISH COATS TO MATCH THE SURFACE ON WHICH THEY ARE MOUNTED OR TO MATCH THE FINISH OF THE ADJACENT SURFACES. EQUIPMENT SURFACES/COMPONENTS WITH A FACTORY-APPLIED PAINT FINISH NEED NOT BE PAINTED.
   b. EXTERIOR LOCATIONS - PRIME ALL EXPOSED CONDUITS, BOXES, FITTINGS, SUPPORT CHANNELS, MOUNTING HARDWARE, AND ACCESSORIES WITH A 2-PART EPOXY PRIMER AND FINISH WITH 2 COATS OF AN ALIPHATIC ACRYLIC URETHANE PAINT. PAINT FINISH TO MATCH THE SURFACE ON WHICH THEY ARE MOUNTED OR TO MATCH THE FINISH OF THE ADJACENT SURFACES. STAINLESS STEEL MATERIALS NEED NOT BE PAINTED.
31. ALL ELECTRIFIED UTILIZATION EQUIPMENT, CONTROL DEVICES, CONTROL CIRCUITING, AND SEPARATELY MOUNTED MOTOR STARTERS/CONTROLLERS ARE SPECIFIED AND PROVIDED UNDER THE APPLICABLE SPECIFICATION SECTIONS. ALL LINE VOLTAGE POWER TO THE ELECTRIFIED UTILIZATION EQUIPMENT SHALL BE PROVIDED UNDER THE ELECTRICAL CONTRACT DOCUMENTS.
32. FOR ELECTRIFIED UTILIZATION EQUIPMENT, COORDINATE THE MOUNTING HEIGHT OF THE ASSOCIATED JUNCTION BOX, DISCONNECT SWITCH, OR STARTER/CONTROLLER WITH THE ACTUAL EQUIPMENT SUPPLIED.

ELECTRICAL GENERAL NOTES AND SPECIFICATIONS (CONTINUED)

33. PROVIDE EARTHQUAKE BRACING FOR ALL ELECTRICAL EQUIPMENT, APPARATUS, AND RACEWAYS. BRACING SHALL, AS A MINIMUM, COMPLY WITH THE COUNTY BUILDING CODE.
34. SUBMIT SHOP DRAWINGS AND CATALOG CUTS OF POWER APPARATUS FOR APPROVAL. SHOP DRAWINGS SHALL BE SUBMITTED IN ELECTRONIC PDF FORMAT.
35. CONDUCTORS SHALL BE COPPER WITH 600 VOLT INSULATION. INSULATION SHALL BE TYPE 90 DEGREES C, WET OR DRY LOCATION, ACCEPTABLE INSULATION TYPES INCLUDE THWN-2, XHHW-2, OR THHN. AN EQUIPMENT GROUND CONDUCTOR SIZED IN ACCORDANCE WITH THE NEC SHALL BE INSTALLED IN ALL FEEDER AND BRANCH CIRCUITS WHETHER INDICATED ON PLANS OR NOT.
36. EXISTING PANELBOARDS SHALL BE PROVIDED WITH NEW TYPEWRITTEN DIRECTORY REFLECTING ALL NEW AND EXISTING LOADS. UTILIZE EXISTING PANELBOARD DIRECTORY AS A GUIDE.
37. ENCLOSED CIRCUIT BREAKERS, DISCONNECT SWITCHES, AND OTHER RELATED APPARATUS SHALL BE PROVIDED AS INDICATED. DISCONNECT SWITCHES SHALL BE HEAVY-DUTY, HORSEPOWER RATED TYPE. POWER APPARATUS SHALL BE AS MANUFACTURED BY GENERAL ELECTRIC, SQUARE D, CUTLER HAMMER, SIEMENS, OR APPROVED SUBSTITUTE.
38. RACEWAYS SHALL BE GALVANIZED RIGID CONDUIT AND FLEXIBLE METALLIC CONDUIT. CONDUIT INSTALLED IN WET LOCATIONS OR OUTDOORS SHALL BE GALVANIZED RIGID CONDUIT UTILIZING WEATHERPROOF/RAINTIGHT THREADED COUPLINGS AND CONNECTORS ONLY.
39. TEST ALL ELECTRICAL EQUIPMENT AND SYSTEMS TO DEMONSTRATE COMPLIANCE WITH THE INTENT OF THE SPECIFICATIONS AND DRAWINGS. GUARANTEE ALL WORK FOR ONE YEAR AFTER FINAL ACCEPTANCE. CORRECT ALL DEFICIENCIES ARISING DURING THIS PERIOD TO THE OWNERS SATISFACTION AT NO ADDITIONAL COST.
40. ALL CONDUITS ENTERING THE BUILDING FROM THE EXTERIOR SHALL BE SEALED TO PREVENT ENTRANCE OF MOISTURE, GASES, AND RODENTS.

ELECTRICAL PROJECT NARRATIVE

1. THIS PROJECT CONSISTS OF THE REMOVAL OF EXISTING ELECTRICAL CONNECTIONS FROM THE EXISTING HOT WATER EQUIPMENT AND THE PROVISION OF NEW ELECTRICAL EQUIPMENT AND CIRCUITS TO SUPPORT A NEW HOT WATER SYSTEM.
2. A NEW 30KVA, 480VΔ:208Y/120V, 3PH, 4W TRANSFORMER AND 3P60A ENCLOSED CIRCUIT BREAKER SHALL BE PROVIDED TO SUPPORT THE PROPOSED HOT WATER HEATER "HWH-1." THE CIRCUIT, WHICH IS CURRENTLY LABELED AS "WATER HEATER 1" BUT DOES NOT HAVE AN EXISTING CIRCUIT CONNECTION, SHALL BE FED FROM ONE OF THE EXISTING 3P70A CIRCUIT BREAKERS WITHIN THE EXTERIOR SWITCHBOARD "SB1." NEW CONDUCTORS AND SURFACE-MOUNTED OVERHEAD CONDUITS SHALL BE PROVIDED TO CONNECT TO THE SWITCHBOARD.
3. NEW MOTOR STARTERS AND CIRCUIT CONNECTIONS FROM EXISTING 208Y/120V, 3PH, 4W PANELBOARD "PANEL 2" SHALL BE PROVIDED TO SUPPORT THE NEW CIRCULATION PUMPS AND WATER SOFTENER. THE CIRCUITS SHALL UTILIZE EXISTING SPARE 1P20A BREAKERS WITHIN THE PANEL.

REV NO.	SYM.	DESCRIPTION	SHT__ OF__	DATE	APPROVED: DOD ADMINISTRATOR

GARRET A. MASUDA
LICENSED PROFESSIONAL ENGINEER
No. 9756-E
HAWAII, U.S.A.

This work was prepared by me or under my supervision, and construction of this project will be under my observation.

Garret A. Masuda 4/30/2028
Signature Expiration Date of the License

DEPARTMENT OF DEFENSE
STATE OF HAWAII

HAWAII ARMY NATIONAL GUARD
B1788 BOILER ROOM IMPROVEMENTS

KALAELOA, OAHU, HAWAII

BUILDING 1788
ELECTRICAL GENERAL NOTES AND SPECIFICATIONS

MASON		JOB NO.	DRAWING NO.
DESIGNED BY: KH	CHECKED BY: GM	CA-202610-C	E-001
DRAWN BY: KH	APPROVED BY: GM	DATE	SHEET
SCALE: AS NOTED		AUG 2026	20 OF 25 SHEETS

FILE_____ DRAWER_____ FOLDER_____

SYMBOL LIST / MOUNTING HEIGHT SCHEDULE

MOUNTING HEIGHT FROM FLOOR TO		(SPECIAL MOUNTING HEIGHTS INDICATED ON PLAN)		
		SYMBOL		DESCRIPTION
TOP	℄	EXISTING	NEW	
				JUNCTION BOX, HORIZONTALLY MOUNTED
				JUNCTION BOX, WALL MOUNTED
				LARGE JUNCTION BOX, WALL MOUNTED
				DUPLEX RECEPTACLE, WALL MOUNTED, GRONDING TYPE, 125V, NEMA TYPE 5-20R
				EQUIPMENT CONNECTION POINT WITH FLEXIBLE CONDUIT WHIP
				MOTOR CONNECTION POINT
			$M	MOTOR STARTER SWITCH, MAXIMUM 1HP
				ELECTRICAL PANELBOARD
				ELECTRICAL EQUIPMENT
				PAD OR FLOOR MOUNTED TRANSFORMER
				ENCLOSED CIRCUIT BREAKER
				CONDUIT RISER DOWN
				CABLE/CONDUIT END
				CONDUIT STUB OUT
				EXPOSED RACEWAY, PROVIDE STRAP 8'-0" ON CENTER MAXIMUM
			A-1	HOMERUN ARROW TO PANELBOARD. LETTER INDICATES PANELBOARD, NUMBER INDICATES CIRCUIT.
			EF 1	EQUIPMENT TAG; EXHAUST FAN "EF-1" INDICATED. ALL OTHERS SIMILAR
				CIRCUIT BREAKER
				GROUND
				POWER TRANSFORMER
				METER
				DEMO HATCHING

ABBREVIATIONS

#	NUMBER
Ω	OHM
Φ/Ø	PHASE
A	AMPERES
AC	ALTERNATING CURRENT
AFCI	ARC FAULT CIRCUIT INTERRUPTER
AIC	AMPERE INTERRUPTING CAPACITY
AL	ALUMINUM
AWG	AMERICAN WIRE GAUGE
C	CONDUIT
CB	CIRCUIT BREAKER
CKT	CIRCUIT (ALSO: CIR)
CT	CURRENT TRANSFORMER
CU	COPPER
DC	DIRECT CURRENT
DIA	DIAMETER
EF	EXHAUST FAN
EM	EMERGENCY
EMT	ELECTRICAL METALLIC TUBING
FLA	FULL LOAD AMPERES
FMC	FLEXIBLE METAL CONDUIT
G/GND	GROUND
GFI/GFCI	GROUND FAULT CIRCUIT INTERRUPTER
GRMC	GALVANIZED RIGID METAL CONDUIT
HVAC	HEATING, VENTILATION, AIR CONDITIONING
HZ	HERTZ
IEEE	INSTITUTE OF ELECTRICAL AND ELECTRONIC ENGINEERS
IMC	INTERMEDIATE METAL CONDUIT
KCMIL	THOUSAND CIRCULAR MILS
KVA	KILOVOLT-AMPERES
LFMC	LIQUID TIGHT FLEXIBLE METAL CONDUIT
MC	METAL CLAD CABLE
MCB	MAIN CIRCUIT BREAKER
MLO	MAIN LUGS ONLY
NEC	NATIONAL ELECTRICAL CODE
NEMA	NATIONAL ELECTRICAL MANUFACTURERS ASSOCIATION
NFPA	NATIONAL FIRE PROTECTION ASSOCIATION
OH	OVERHEAD
PNL	PANEL
PWR	POWER
QTY	QUANTITY
REQ	REQUIRED
RMC	RIGID METAL CONDUIT
SP	SPARE
ST	SHUNT TRIP
SW	SWITCH
UG	UNDER GROUND
UL	UNDERWRITERS LABORATORY
V	VOLT
VA	VOLT-AMPERE
VFD	VARIABLE FREQUENCY DRIVE
W	WATT OR WIRE
WH	WATER HEATER
WP	WEATHERPROOF OR WATERPROOF
XFMR	TRANSFORMER

REV NO.	SYM.	DESCRIPTION	SHT__ OF___	DATE	APPROVED: DOD ADMINISTRATOR

GARRET A. MASUDA
LICENSED PROFESSIONAL ENGINEER
No. 9756-E
HAWAII, U.S.A.

This work was prepared by me or under my supervision, and construction of this project will be under my observation.

Garret A. Masuda 4/30/2028
Signature Expiration Date of the License

DEPARTMENT OF DEFENSE
STATE OF HAWAII

HAWAII ARMY NATIONAL GUARD
B1788 BOILER ROOM IMPROVEMENTS

KALAELOA, OAHU, HAWAII

BUILDING 1788
ELECTRICAL SYMBOL LIST & MOUNTING HEIGHT LIST

MASON

DESIGNED BY:	CHECKED BY:	JOB NO.	DRAWING NO.
KH	GM	CA–202610–C	E-002
DRAWN BY: KH	APPROVED BY: GM	DATE AUG 2026	SHEET 21 OF 25 SHEETS
SCALE: AS NOTED			

FILE_____ DRAWER_____ FOLDER_____

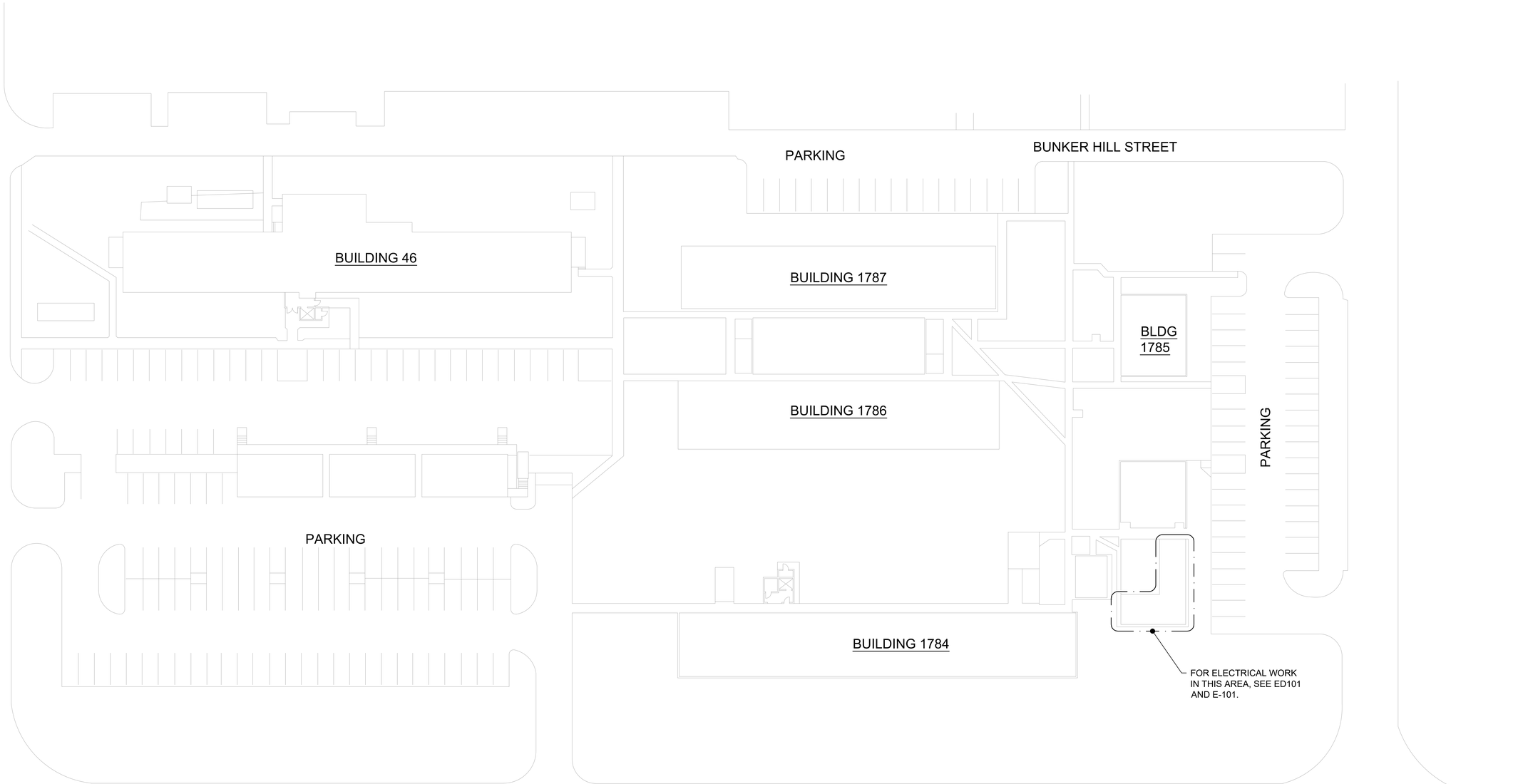

1 ELECTRICAL SITE PLAN
SCALE: 1" = 30'-0"

REV NO.	SYM.	DESCRIPTION	SHT.__ OF__	DATE	APPROVED: DOD ADMINISTRATOR

GARRET A. MASUDA
LICENSED PROFESSIONAL ENGINEER
No. 9756-E
HAWAII, U.S.A.

This work was prepared by me or under my supervision, and construction of this project will be under my observation.

Garret A. Masuda 4/30/2028
Signature Expiration Date of the License

DEPARTMENT OF DEFENSE
STATE OF HAWAII

HAWAII ARMY NATIONAL GUARD
B1788 BOILER ROOM IMPROVEMENTS

KALAELOA, OAHU, HAWAII

BUILDING 1788
ELECTRICAL SITE PLAN

MASON

DESIGNED BY:	CHECKED BY:	JOB NO.	DRAWING NO.
KH	GM	CA–202610–C	E-003
DRAWN BY: KH	APPROVED BY: GM	DATE	SHEET
SCALE: AS NOTED		AUG 2026	22 OF 25 SHEETS

FILE_____ DRAWER_____ FOLDER_____

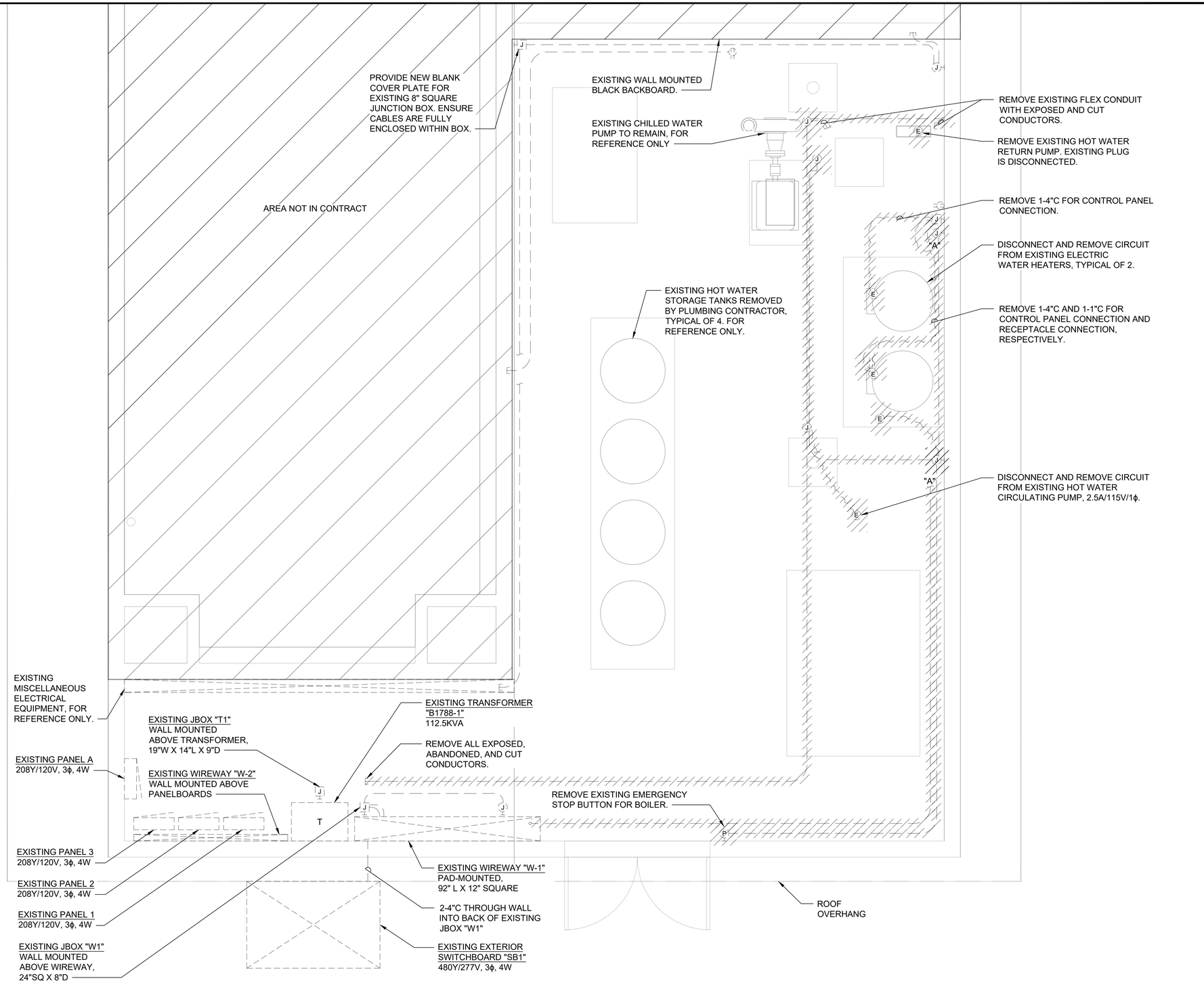

A1 ELECTRICAL DEMOLITION PLAN
SCALE: 1/2" = 1'-0"

GENERAL SHEET NOTES

1. THERE IS A CONCURRENT ONGOING SWITCHBOARD REPLACEMENT PROJECT (PART OF THE STAND-BY EMERGENCY GENERATOR INSTALLATION AT KALAELOA PROJECT, STATE JOB NUMBER CA-202004-C) AND MANY EXISTING CIRCUITS HAVE BEEN RELOCATED, ABANDONED, OR ARE UNVERIFIED. COORDINATE WITH CONTRACTING OFFICER FOR CONCURRENT PROJECT INFORMATION.
2. COORDINATE WITH PLUMBING DRAWINGS FOR REMOVAL OF HOT WATER EQUIPMENT.

REV NO.	SYM.	DESCRIPTION	SHT__ OF__	DATE	APPROVED: DOD ADMINISTRATOR

GARRET A. MASUDA LICENSED PROFESSIONAL ENGINEER No. 9756-E HAWAII, U.S.A.

This work was prepared by me or under my supervision, and construction of this project will be under my observation.

Garret A. Masuda 4/30/2028
Signature Expiration Date of the License

DEPARTMENT OF DEFENSE
STATE OF HAWAII

HAWAII ARMY NATIONAL GUARD
B1788 BOILER ROOM IMPROVEMENTS

KALAELOA, OAHU, HAWAII

BUILDING 1788
ELECTRICAL DEMOLITION PLAN

MASON		JOB NO.	DRAWING NO.
DESIGNED BY: KH	CHECKED BY: GM	CA-202610-C	ED001
DRAWN BY: KH	APPROVED BY: GM	DATE	SHEET
SCALE: AS NOTED		AUG 2026	23 OF 25 SHEETS

FILE_____ DRAWER_____ FOLDER_____

SHEET NOTES

1. COORDINATE WITH PLUMBING DRAWINGS FOR ALL EQUIPMENT LOCATIONS. VERIFY WITH EQUIPMENT MANUFACTURER ALL EQUIPMENT CONNECTION REQUIREMENTS.
2. PROVIDE MOUNTING SUPPORTS FOR ALL ELECTRICAL DEVICES AND CONDUIT AS REQUIRED. COORDINATE EQUIPMENT LOCATIONS WITH PLUMBING CONTRACTOR.

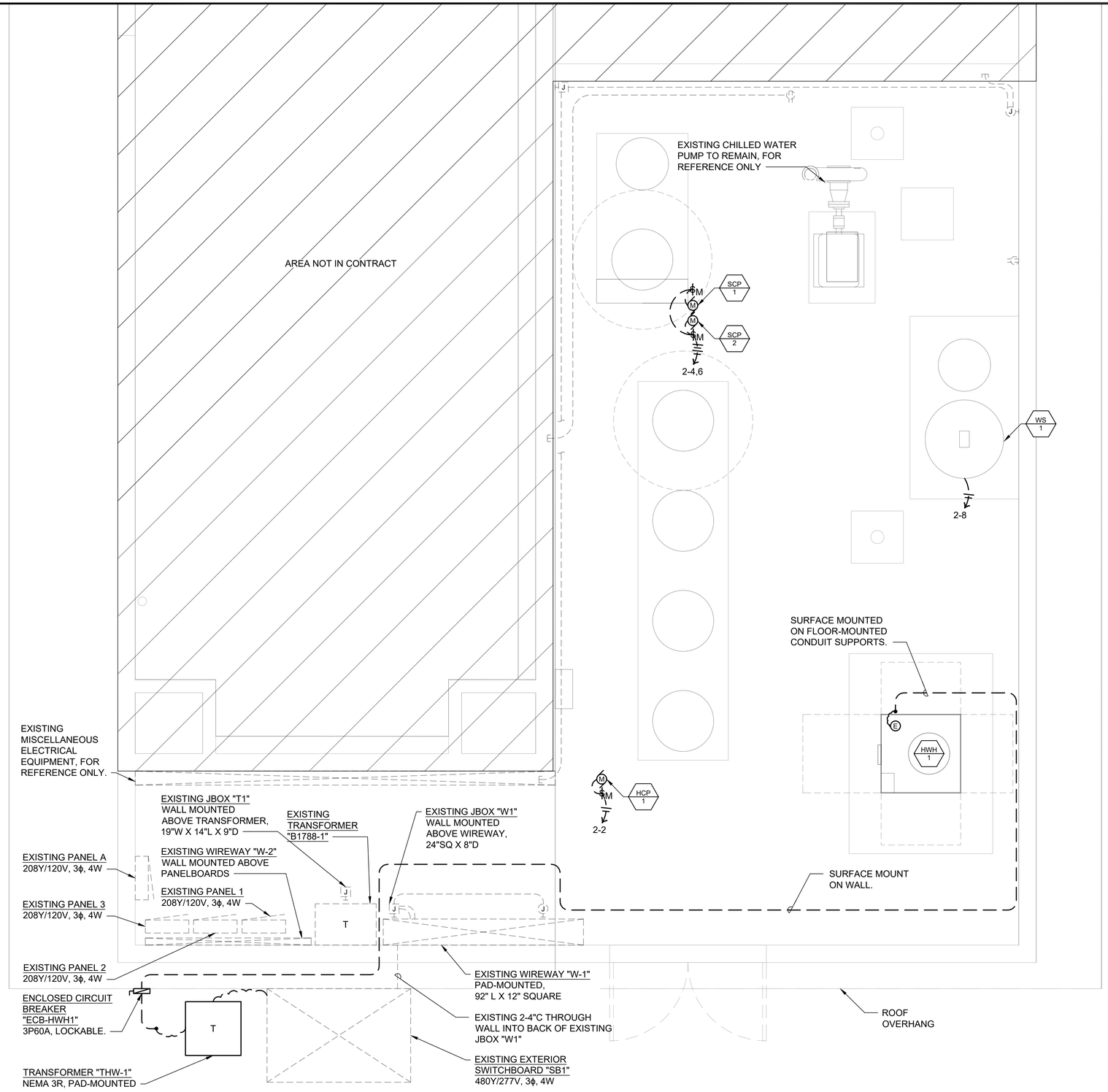

A1 ELECTRICAL FLOOR PLAN
SCALE: 1/2" = 1'-0"

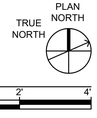

0 1' 2' 4'

REV NO.	SYM.	DESCRIPTION	SHT__ OF__	DATE	APPROVED: DOD ADMINISTRATOR

GARRET A. MASUDA LICENSED PROFESSIONAL ENGINEER No. 9756-E HAWAII, U.S.A.

This work was prepared by me or under my supervision, and construction of this project will be under my observation.

Garret A. Masuda 4/30/2028
Signature Expiration Date of the License

DEPARTMENT OF DEFENSE
STATE OF HAWAII

HAWAII ARMY NATIONAL GUARD
B1788 BOILER ROOM IMPROVEMENTS

KALAELOA, OAHU, HAWAII

BUILDING 1788
ELECTRICAL FLOOR PLAN

MASON

DESIGNED BY:	CHECKED BY:	JOB NO.	DRAWING NO.
KH	GM	CA–202610–C	E-101
DRAWN BY: KH	APPROVED BY: GM	DATE	SHEET
SCALE: AS NOTED		AUG 2026	24 OF 25 SHEETS

FILE_____ DRAWER_____ FOLDER_____

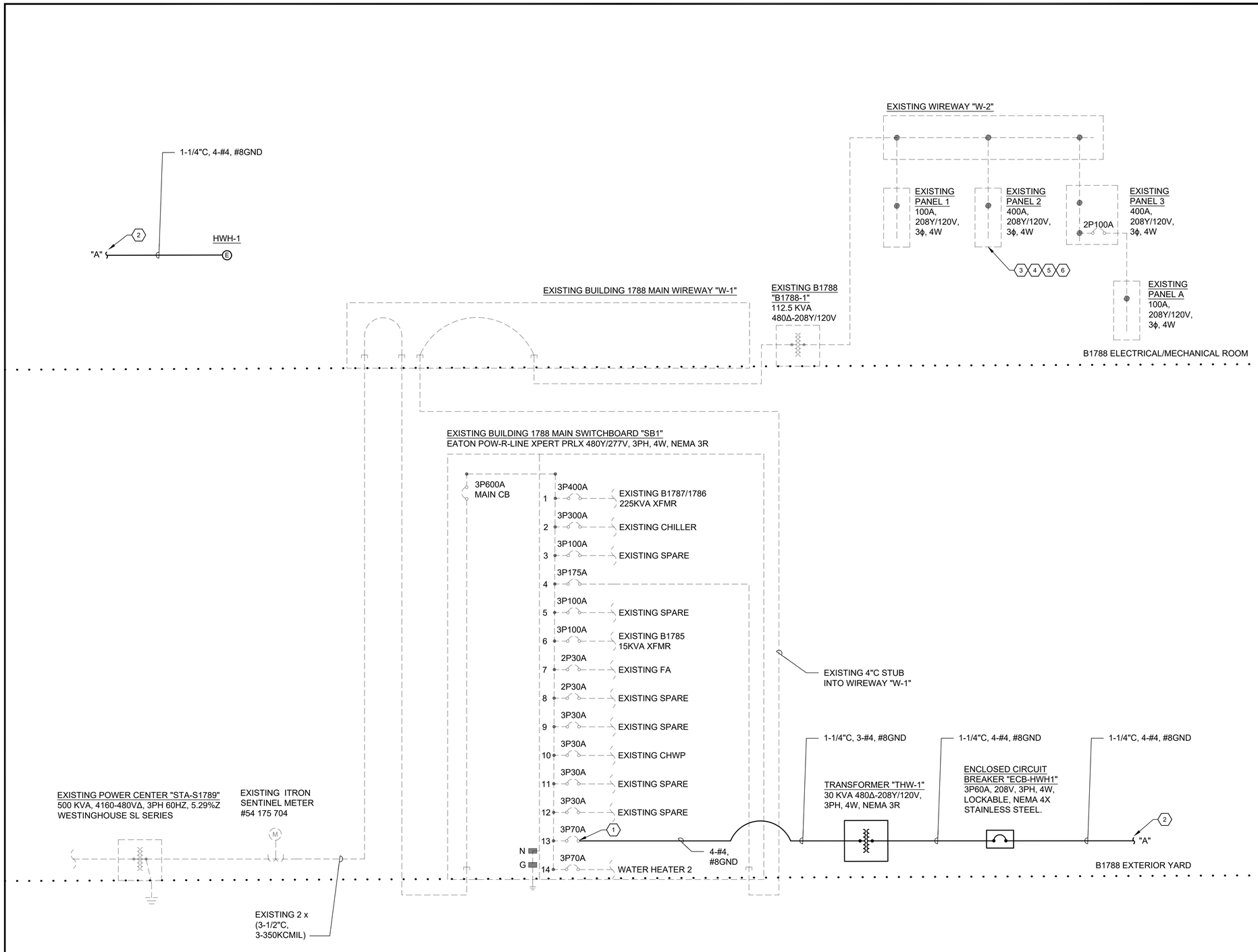

A1 ELECTRICAL ONE-LINE DIAGRAM
SCALE: NTS

SHEET NOTES

1. ALL DASHED LINES REPRESENT EXISTING EQUIPMENT AND INFRASTRUCTURE.

   ALL BOLD SOLID LINES INDICATE NEW WORK.

2. THE EXISTING EQUIPMENT CONFIGURATIONS SHOWN ARE BASED ON VISUAL FIELD OBSERVATIONS. VERIFY EXISTING CONDITIONS PRIOR TO INSTALLING NEW ELECTRICAL CIRCUITS.

SHEET KEYNOTES

1. CONNECT NEW CIRCUIT TO EXISTING SPARE BREAKER, CURRENTLY LABELED "WATER HEATER 1." RE-LABEL BREAKER TO "HWH-1"
2. INSTALL CONDUIT THROUGH WALL ABOVE WIREWAY "W-1"
3. PROVIDE 3/4"C, 2-#12, #12GND FROM CIRCUIT #2 FOR CIRCULATION PUMP "HCP-1." UTILIZE EXISTING SPARE 1P20A BREAKER.
4. PROVIDE 3/4"C, 2-#12, #12GND FROM CIRCUIT #4 FOR CIRCULATION PUMP "SCP-1." UTILIZE EXISTING SPARE 1P20A BREAKER.
5. PROVIDE 3/4"C, 2-#12, #12GND FROM CIRCUIT #6 FOR CIRCULATION PUMP "SCP-2." UTILIZE EXISTING SPARE 1P20A BREAKER.
6. PROVIDE 3/4"C, 2-#12, #12GND FROM CIRCUIT #8 FOR WATER SOFTENER "WS-1." UTILIZE EXISTING SPARE 1P20A BREAKER.

REV NO.	SYM.	DESCRIPTION	SHT__ OF__	DATE	APPROVED: DOD ADMINISTRATOR

GARRET A. MASUDA
LICENSED PROFESSIONAL ENGINEER
No. 9756-E
HAWAII, U.S.A.

This work was prepared by me or under my supervision, and construction of this project will be under my observation.

Garret A. Masuda 4/30/2028
Signature Expiration Date of the License

DEPARTMENT OF DEFENSE
STATE OF HAWAII

HAWAII ARMY NATIONAL GUARD
B1788 BOILER ROOM IMPROVEMENTS

KALAELOA, OAHU, HAWAII

BUILDING 1788
ELECTRICAL ONELINE DIAGRAMS

MASON		JOB NO.	DRAWING NO.
DESIGNED BY: KH	CHECKED BY: GM	CA–202610–C	E-601
DRAWN BY: KH	APPROVED BY: GM	DATE	SHEET
SCALE: AS NOTED		AUG 2026	25 OF 25 SHEETS

FILE_____ DRAWER_____ FOLDER_____

SPECIAL NOTICE TO BIDDERS - CONSTRUCTION

QUALIFICATIONS OF BIDDERS - Prospective bidders must be capable of performing the work for which bids are being called.

The Department of Defense no longer requires a submittal of "INTENTION TO BID" unless otherwise stated in the notice to bidders.

If two (2) or more prospective bidders desire to bid jointly as a joint venture on a single project, they must file an affidavit of joint venture with their notice of intention to bid or if no intent to bid is required, shall submit an affidavit of joint venture prior to bid opening. Such affidavit of joint venture will be valid only for the specific project for which it is filed. No further license is required when all parties to the joint venture possess current and appropriate contractor's licenses. Joint venture are required to be licensed in accordance with Chapter 444 of the Hawaii Revised Statutes, as amended, and the rules and regulations of the Contractor's License Board when any party to the joint venture agreement does not hold a current or appropriate contractor's license.

The Adjutant General or his designated representative may, in accordance with Section 103D-310, Hawaii Revised Statutes, require the prospective bidder to submit answers to questions in the "Standard Questionnaire and Financial Statement for Bidders," on the form provided by the Department, properly executed and notarized, setting forth a complete statement of the experience of such prospective bidder and his organization in performing similar work and a statement of the equipment proposed to be used, together with adequate proof of the availability of such equipment, at least forty-eight (48) hours prior to the time advertised for the opening of bids. If the information in the questionnaire proves satisfactory, the bidder's proposal will be received. All information contained in the answers to the questionnaire shall be kept confidential. The questionnaire will be returned to the bidder after it has served its purpose.

If upon review of the Questionnaire, or otherwise, the bidder appears not fully qualified or able to perform the intended work, the Adjutant General or his designated representative shall, after affording the bidder an opportunity to be heard and if still of the opinion that the bidder is not fully qualified to perform the work, refuse to receive or to consider any bid offered by the prospective bidder.

Failure to complete the prequalification questionnaire, (IF SENT TO YOU), will be sufficient cause for the Department to disqualify a prospective bidder.

INTERPRETATION OF QUANTITIES IN BID SCHEDULE - When quantities for individual items of work are listed in the bid form for which respective unit prices are asked, said quantities are to be considered as approximate and are to be used by the Department only for the purpose of comparing on a uniform basis bids offered for the work. The Department does not, expressly or by implication, agree that the actual quantity of work

will correspond therewith. The undersigned agrees that his is satisfied with and will at no time dispute said estimated quantities as a means of comparing the bids.

After determining the low bidder by comparison of bids submitted in accordance with the proposal form, the Adjutant General or his designated representative reserves the right to increase or decrease the scope of the improvement.

On unit price bids, payment will be made only for the actual number of units incorporated into the finished project at the unit price bid.

It is understood and agreed that the contractor will make no claim for anticipated profit or loss of profit due to the Department's right to eliminate entirely portions of the work or to increase or decrease any or all of the quantities shown in the proposal form and/or scope of work.

CONTENTS OF CONTRACT FORMS – The Statement of Work will provide the location, description, and the contract time of the work contemplated for which a lump sum bid price is asked or containing a schedule of items, together with estimated quantities of work to be performed and materials to be furnished, for which unit bid prices and/or lump sum bid prices are asked.

Proposal forms will include a listing of joint contractor and/or subcontractors asking the name of each person or firm to be engaged on the project as a joint contractor or subcontractor.

All papers bound with or attached to the offer form shall be considered a part thereof and shall not be detached or altered when the bid is submitted.

The plans, specifications and other documents designated in the bid document package, will also be considered a part thereof whether attached or not.

BIDDERS RESPONSIBILITY FOR EXAMINATION OF PLANS, SPECIFICATIONS, SITE OF WORK, ETC. - The bidder shall examine carefully the site work contemplated and the proposal, plans, specifications, supplemental specifications, special provisions and contract and bond forms therefore. The submission of a bid shall be considered as a warranty that the bidder has made such examination and is satisfied with the conditions to be encountered in performing the work and with the requirements of the plans, specifications, supplemental specifications, special provisions, contract and bond.

No extra compensation will be given by reason of the Contractor's misunderstanding or lack of knowledge of the requirements of the work to be accomplished or the conditions to be encountered in performing the project.

Where an investigation of subsurface conditions has been made by the Department in respect to foundation or other design, the bidders may inspect the records of the Department as to such investigation, including examination of samples, if any. It is

understood, however, that any such information furnished is for the bidders' convenience only and no assurance is given that conditions found at the time of subsurface investigation, such as the presence or absence of water, will be conditions that prevail at the time of construction.

When the contract plan includes a log of test borings showing a record of the data obtained by the Department's investigation of subsurface conditions, said log represents only the opinion of the Department as to the character of material encountered by it in its test borings and there is no warranty, either expressed implied, that the conditions indicated are representative of those existing throughout the work or any part of it, or that unforeseen developments may not occur.

Information regarding the site of work given on the drawings or specifications has been obtained by the Department and is believed to be reasonably correct, however, it is the responsibility of the bidder to verify all such information. Any utilities that the Contractor encounters during the progress of the work, such as telephone ducts, electric ducts, water lines, sewer lines, electric lines and drainage pipes, whether shown or not on the contract plans, shall not be disturbed or damaged unless otherwise instructed in the plans and specifications.

In the event the utilities are damaged or disturbed by the Contractor, the Contractor shall be held liable for the damage or disturbed utilities which were:

A. Shown on the plan.
B. Located and exposed on the job as it progressed.
C. Pointed out to the Contractor in the field.

The Contractor shall repair the damaged or disturbed utilities to the existing condition at no cost to the Department or the project. Any damage claims due to the disruption of service caused by the utilities being damaged shall be paid by the Contractor who shall save harmless the Department from all suits, actions, or claims of any character brought on account of such damages.

In the event utilities which were not shown on the plans and specifications are damaged or disturbed by the Contractor, the Contractor shall not be held liable but shall notify the Engineer. Upon instruction from the Engineer, the Contractor shall repair all damages which shall be considered to be additional work.

Utilities which must be relocated due to construction and not so indicated in the plans and specifications shall also be considered to be additional work. The Contractor shall not in any case, if he encounters underground utilities, proceed with any work until he has notified the Engineer.

No information derived from such inspection of records of subsurface investigations made by the Department or from the Engineer or from his authorized representative or from maps, plans, specifications or drawings will in any way relieve the Contractor from

any risk or from properly fulfilling all the terms of the contract. The log tests borings if included in the plans are only for the convenience of the bidder and do not constitute a part of the contract. The Contractor is solely responsible for all assumptions, deductions, or conclusions he may make or derive from the subsurface records furnished.

ADDENDA AND INTERPRETATIONS - Discrepancies, omissions, or doubts as to the meaning of drawings and specifications should be communicated via email as directed in the Notice to Bidders and must be received by the Engineering Office, Department of Defense, no later than the date stated in the Notice to Bidders for submittal of questions. Any interpretation, if made, and any supplemental instructions will be in the form of written addenda. All addenda will be posted on the State Procurement Office website http://spo.hawaii.gov . Failure of any bidder to receive any such addendum or interpretations shall not relieve such bidder from any obligation under his bid as submitted. All addenda so issued shall become part of the contract documents.

PREPARATION OF PROPOSAL - The bidder's proposal must be submitted on the proposal form furnished by the Department. The proposal must be prepared in full accordance with the instructions therein. The bidder must state, both in words and numerals, the lump sum price at which the work contemplated is proposed to be done. These prices must be written in ink or typed. Prices written in pencil are not acceptable. In case of a discrepancy between the prices written in words and those written in figures, the words shall govern over the figures. The bidder shall sign the proposal in the spaces provided with ink.

If the proposal is made by an individual, his name and post office address must be shown in the space provided. If made by a partnership, the name and post office address of each member of the partnership must be shown and the proposal signed by all partners or evidence in the form of a partnership agreement must be submitted showing the authority of the partner to enter, on behalf of said partnership, into contract with the State. If made by a corporation, the proposal must show the name, titles, and business address of the president, secretary and treasurer and also evidence in the form of a corporate resolution must be submitted showing the authority of the particular corporate representative to enter on behalf of said corporation into contract with the State. (See sample). If made by a joint venture the name and post office address of each member of the individual form, partnership or corporation comprising the joint venture must be shown with other pertinent information required of individuals, partnerships or corporations as the case may be. The proposal must be signed by all parties to the joint venture or evidence in the form of a Joint Venture Agreement must be submitted showing the authority of the Joint Venture's representative to enter on behalf of said Joint Venture into contract with the State.

Pursuant to the requirements of Section 103D-302, Hawaii Revised Statutes, each bidder shall include in his bid the name of each person or firm to be engaged by the bidder on the project as joint contractor or subcontractor indicating also the nature and scope of work to be performed by such joint contractor and/or subcontractor.

BID SECURITY - No proposal totaling $25,000 or more will be considered unless accompanied by one of the following forms of bidder's security:

A. Surety bond underwritten by a company licensed to issue bonds in this State.

B. Legal Tender.

C. Certificate of Deposit; share certificate; or cashier's, treasurer's, tellers or official check drawn by, or certified check accepted by, and payable on demand to the State by a bank, a savings institution, or credit union insured by the Federal Deposit Insurance Corporation or the National Credit Union Administration.

(1) These instruments may be utilized only to a maximum of $100,000.

(2) If the required security amount totals over $100,000, more than one instrument not exceeding $100,000 each and issued by different financial institutions shall be accepted.

THE BID SECURITY SHALL BE AT LEAST FIVE (5) PERCENT OF THE BID AMOUNT.

If the bidder is a corporation, evidence in the form of a corporate resolution, authorizing the corporate representative to execute the bond must be submitted with the proposal. If the bidder is a partnership, all partners must sign the bond or evidence in the form of a partnership agreement must be submitted showing the authority of the partner.

If the bidder is a joint venture, all parties to the joint venture must sign the bond or evidence in the form of a joint venture agreement must be submitted showing the authority of the bidder to sign the bond on behalf of the joint venture.

In the case where the award will be made on a group or item basis, the amount of proposal guaranty shall be based on the total bid for all groups or items submitted.

Bidders are cautioned that surety bid bonds which place a limit in value to the difference between the bid amount and the next acceptable bid, such value not to exceed the purported amount of the bond, are acceptable. Also, surety bid bonds which place a time limit on the right of the State to make claim other than allowed by statutes or these General Conditions are not acceptable. Bidders are hereby notified that a surety bid bond containing such limitation(s) is not acceptable and a bidder's bid accompanied by such surety bid bond will be automatically rejected.

DELIVERY OF PROPOSALS - The entire proposal shall be placed together with the bid security, in a sealed envelope so marked as to indicate the identity of the project, the project number, the date of bid opening and the name and address of the bidder and then delivered as indicated in the Notice to Bidders. Bids which do not comply with this requirement may not be considered. Proposals will be received up to the time fixed in the

public notice for opening of bids and must by that time be in the hands of the officials indicated. The words 'SEALED BID' must be clearly written or typed on the face of the sealed envelope containing the proposal guaranty.

WITHDRAWAL OR REVISION OF PROPOSALS - Any bid may be withdrawn or revised at any time prior to, but not after, the time fixed in the public notice for the opening of bids, provided that a request in writing, executed by the bidder or his duly authorized representative, for the withdrawal or revision of such bid is filed with the Adjutant General before the time set for the opening of bids. The withdrawal of a bid shall not prejudice the right of a bidder to file a new bid. Whether or not bids are opened exactly at the time fixed in the public notice for opening bids, a bid will not be received after that time, nor may any bid be withdrawn after the time fixed in the public notice for the opening of bids.

PUBLIC OPENING OF PROPOSALS - Proposals will be opened and read publicly at the time and place indicated in the Notice to Bidders. Bidders, their authorized agents, and other interested parties are invited to be present.

DISQUALIFICATION OF BIDDERS - Any one or more of the following cause will be considered as sufficient for the disqualification of a bidder and the rejection of his proposal or proposals:

A. Non-compliance with “QUALIFICATION OF BIDDERS".

B. Evidence of collusion among bidders.

C. Lack of responsibility and cooperation as shown by past work.

D. Being in arrears on existing contracts with the State of Hawaii or having defaulted on a previous contract.

E. Lack of proper equipment and/or sufficient experience to perform the work contemplated as revealed by the Standard Questionnaire and Financial Statement for Bidders.

F. No contractor's license or a contractor's license which does not cover type of work contemplated.

G. More than one proposal for the same work from an individual, firm, partnership, corporation, or joint venture under the same or different name.

H. Delivery of bids after the deadline specified in the advertisement calling for bids.

I. Failure to pay, or satisfactorily settle, all bids overdue for labor and material on former contracts in force at the time of issuance of proposal forms.

CONSIDERATION OF PROPOSALS - After the proposals are opened and read, the figures will be extended and/or totaled in accordance with the bid prices of the acceptable proposals and the totals will be compared and the results of such comparison shall immediately be made public. In the comparison of bids, words written in the proposals will govern over figures and unit prices will govern over totals. Until the award of the contract, however, the right will be reserved to reject any and all proposals and to waive any defects or technicalities as may be deemed best for the interest of the State.

IRREGULAR PROPOSALS - Proposals will be considered irregular and may be rejected for the following reasons:

A. If the proposal is unsigned.

B. Bid security not in accordance with paragraph "BID SECURITY".

C. If proposal is on a form other than that furnished by the Department or if the form is altered or any part thereof detached.

D. If the proposal shows any non-compliance with applicable law, alteration of form, additions not called, conditional bids, incomplete bids, uninitiated erasures, other defects, or if the prices are obviously unbalanced, or if sufficient funds are not available to prosecute the work.

E. If the bidder adds any provisions reserving the right to accept or reject an award, or to enter into a contract pursuant to an award.

This does not exclude a proposal limiting the maximum gross amount of awards acceptable to any one bidder at any one bid letting, provided that any selection of awards will be made by the Department.

F. When a proposal is signed by an officer or officers of a corporation and a currently certified corporate resolution authorizing such signer(s) to submit such proposal is not submitted with the proposal or when the proposal is signed by an agent other than the officer or officers of a corporation or a member of a partnership and a Power of Attorney is not submitted with the proposal.

G. Where there is an incomplete or ambiguous listing of joint contractors and/or subcontractors the proposal may be rejected. All work which is not listed as being performed by joint contractor and/or subcontractors must be performed by the bidder with his own employees. Additions to the list of joint contractors or subcontractors will not be allowed. Whenever there is a doubt as to the completeness of the list, the bidder will be required to submit within five (5) working days, written confirmation that the work in question will be performed with his own force. Whenever there is more than one joint contractor and/or subcontractor listed for the same item of work, the bidder will be required to either confirm in writing within five (5) working days that all joint contractors or subcontractors listed will actually be engaged on the project or obtain with five (5) working

days, written releases from those joint contractor and/or subcontractors who will not be engaged.

AWARD OF CONTRACT - The award of contract, if it be awarded, will be made within ninety (90) consecutive calendar days after the opening of the proposals to the lowest responsible and responsive bidder (including the alternate or alternates which may be selected by the Adjutant General in the case of alternate bids) whose proposal complies with all the requirements prescribed, but in no case will an award be made until all necessary investigations are made. The successful bidder will be notified, by letter mailed to the address shown on the proposal that his bid has been accepted and that he has been awarded the contract.

No contract will be awarded to any person or firm suspended under the provisions of Chapter 104 and Chapter 444, Hawaii Revised Statutes, as amended.

CANCELLATION OF AWARD - The Adjutant General or his designated representative reserves the right to cancel the award of any contract at any time before the execution of said contract by all parties without any liability to the awardee and to any other bidder.

RETURN OF BID SECURITY (excluding bid bonds) - All bid securities, except those of the four (4) lowest bidders, will be returned immediately following the opening and checking of the proposals. The retained bid securities of the remaining two (2) lowest bidders will be returned within five (5) working days following the execution of contract. The successful bidder's bid security may be returned after a satisfactory contract bond has been furnished and the contract has been executed.

RETURN OF BID BONDS – The bid bonds will be returned only after receipt of a written request from the contractor.

REQUIREMENT OF PERFORMANCE AND PAYMENT BONDS - Performance and Payment Bonds shall be required for contracts exceeding $25,000. At the time of the execution of the contract, the successful bidder shall file a good and sufficient performance and payment bonds on the form furnished by the Department or the contractors Surety, each in an amount equal to one hundred percent (100%) of the amount of the contract price unless otherwise stated in the solicitation of bids. Acceptable performance and payment bonds shall be limited to the following:

A. Surety bond underwritten by a company licensed to issue bonds in this State; or

B. Legal Tender; or

C. A certificate of deposit; share certificate; or cashier's, treasurer's, teller's or official check drawn by, or a certified check accepted by, and payable on demand to the State by a bank, a savings institution, or credit union insured by the Federal Deposit Insurance Corporation or the National Credit Union Administration.

(1) These instruments may be utilized only to a maximum of $100,000.

(2) If the required security or bond amount totals over $100,000, more than one instrument not exceeding $100,000 each and issued by different financial institutions shall be acceptable.

If the contractor fails to deliver the required performance and payment bonds, the contractor's award shall be canceled, its bid security enforced, and award of the contract shall be made to the next lowest bidders.

EXECUTION OF THE CONTRACT - The contract shall be signed by the successful bidder and returned, together with a satisfactory performance and payment bonds, within ten (10) consecutive calendar days, after the bidder has received his contract for execution or within such further time as the Adjutant General or his designated representative may allow. No proposal or contract shall be considered binding upon the State until the contract has been fully and properly executed by all parties thereto and the Adjutant General or his designated representative has endorsed therein his certificate, as required by Section 103D-309, Hawaii Revised Statutes, that there is an available unexpended appropriation or balance of an appropriation over and above all outstanding contracts sufficient to cover the State's amount required by such contract.

On any individual award totaling less than $50,000, the State reserves the right to execute the contract by the issuance of a State Purchase Order. Acceptance shall result in a binding contract between the parties without further action by the State. Executing the contract by Purchase Order shall not be deemed a waiver of these specification requirements.

FAILURE TO EXECUTE THE CONTRACT - If the bidder to whom a contract is awarded shall fail or neglect to enter into the contract and to furnish satisfactory security within ten (10) consecutive calendar days after such award or within such further time as the Adjutant General or his designated representative may allow, the award shall be canceled and the bid security shall be declared forfeited. The bid security shall thereupon become a realization of the State, not as a penalty, but in liquidation of the damages sustained. The Adjutant General may thereupon award the contract to the next lowest responsible bidder or may call for new bids, whichever method he may deem is to the best interest of the State.

NOTICE TO PROCEED - After the contract is fully executed, the Contractor will be sent a formal "Notice to Proceed" advising the Contractor of the date on which he may proceed with the work. The Contractor shall be allowed ten (10) consecutive working days from said date to begin his work. In the event that the Contractor refuses or neglects to start the work, the Adjutant General or his designated representative may terminate the contract.

SPECIAL PROVISIONS FOR CONSTRUCTION CONTRACTS

RESPONSIBILITY OF OFFERORS

Offeror shall furnish proof of compliance in accordance with Act 190 Amendment to HRS 103D-310(c)

Required as a prerequisite to entering into a contract, the contractor shall register on the Hawaii Compliance Express web site for all tax clearances by going to http://vendors.ehawaii.gov and registering there.

A Certificate of Vendor Compliance generated from this website should be included with their bid proposal. A Compliant status is required prior to awarding the contract.

COMPREHENSIVE ANNUAL FINANCIAL REPORTING

For any project that involves work on multiple structures, including non-building structures, whether it be new work or renovation work, or when the project involves both site improvements and a structure, the Contractor shall provide the following information to the Project Manager for fixed asset allocation purposes:

1. Within 30 calendar days of award as applicable to the project, the following shall be submitted:
   a. The total cost of each individual structure.
   b. The total cost of on-site improvement work; and
   c. The total cost of off-site improvement work.

2. After all work, including all change order work has been completed, and prior to a request for final payment, the following shall be submitted:
   a. The total cost of each individual structure including any related change order cost.
   b. The total cost of on-site improvement work including any related change order cost; and
   c. The total cost of off-site improvement work including any related change order cost.

3. The sum total cost of each category noted above shall total to the contract amount awarded, plus all change order work issued.
   a. The cost of each individual structure includes the cost of the structure and any work within five (5) feet of the structure or building line which may include, but is not limited to its foundation, foundation earthwork, and utility improvements within and immediately below the building line.
   b. The on-site improvement cost includes all site improvement work from

five (5) feet and beyond the building line and up to the project's property line, which may include but is not limited to clearing and grubbing, grading, drainage system, site utility, walkway, parking lot, and landscape improvements.

c. The off-site improvement cost includes all off-site improvement work outside of the project's property line, which may include but is not limited to walkway, landscape, drainage, utility, and roadway improvements.

LIABILITY INSURANCE

The Contractor shall not commence any work until it obtains, at its own expense, all required liability insurance. Such insurance must have the approval of the State as to limit form and amount and must be maintained with a company acceptable to the State. Such insurance must be maintained for the full period of the contract and shall provide protection from claims arising out of or resulting from the Contractor's operations under the Contract itself Subcontractor or by anyone directly or indirectly employed by any of them or by anyone for whose acts any of them may be liable.

The contractor shall take out and maintain during the life of this contract broad form public liability (Bodily Injury) and broad form property damage liability insurance in a combined single limit not less than $1,000,000 and not less than $2,000,000 in the aggregate to protect such contractor and all his subcontractors from claims for damages for personal injury, accidental death and property damage which may arise from operations under this contract, whether such operations be by himself or anyone directly or indirectly employed by either of them and to include automotive liability, workers compensation and employers liability.

The insurance described herein will be maintained by the Contractor for the full period of the Contract and in no event will be terminated or otherwise allowed to lapse prior to final acceptance of the work by the State.

A certificate of insurance acceptable to the State shall be filed with the State prior to commencement of the work. Such certificate shall contain a provision that coverage afforded under the policy will not be canceled or changed until at least thirty days written notice has been given to the State by registered mail at the address denominated for the State in the Contract for official communications to it should any policy be canceled before final acceptance by the State, and the Contractor fails to immediately procure replacement insurance as specified, the State reserves the right to procure such insurance and to deduct the cost thereof from any sum due the Contractor.

BID PREPARATION

Offer Form, Page Of-1. Offeror is requested to submit its offer using Offeror's exact legal name as registered with the Department of Commerce and Consumer Affairs, if applicable; and to indicate exact legal name in the appropriate space on Offer Form, page OF-1. Failure to do so may delay proper execution of the contract.

The authorized signature on the first page of the Offer Form shall be an original signature in ink. If unsigned or the affixed signature is a facsimile or a photocopy, the offer shall be automatically rejected unless accompanied by other material, containing an original signature, indicating the Offeror's intent to be bound.

Hawaii Business. A business entity referred to as a "Hawaii business", is registered and incorporated or organized under the laws of the State of Hawaii.

Compliant non-Hawaii business. A business entity referred to as a "compliant non-Hawaii business," is not incorporated or organized under the laws of the State of Hawaii but is registered to do business in the State.

Tax Liability. Work to be performed under this solicitation is a business activity taxable under Chapter 237, Hawaii Revised Statutes (HRS), and vendors are advised that they are liable for the Hawaii GET at the current rate.

4.712% tax rate. All businesses located on Oahu are required to pay the ½% County Surcharge tax on all Oahu transactions for which they pay the 4% GE tax. Neighbor island and out-of-state businesses that deliver goods or services to Oahu and have a 'physical presence' on Oahu, must pay the new ½% County Surcharge tax on their Oahu transactions.

4% tax rate. Neighbor island and out-of-state businesses that do not deliver any goods or services to Oahu are not subject to the new ½% County Surcharge tax.

If, however, an Offeror is a person exempt by the HRS from paying the GET and therefore not liable for the taxes on this solicitation, Offeror shall state its tax-exempt status and cite the HRS chapter or section allowing the exemption.

Taxpayer Preference. For evaluation purposes, pursuant to §103D-1008, HRS, the Bidder's tax-exempt price offer submitted in response to an IFB shall be increased by the applicable retail rate of general excise tax and the applicable use tax. Under no circumstance shall the dollar amount of the award include the aforementioned adjustment.

AWARD OF CONTRACT

Method of Award. Award, if made, shall be to the responsive, responsible offeror submitting the lowest Lump Sum Bid unless otherwise noted in the bid documents.

Responsibility of Lowest Responsive Bidder. Reference Responsibility of Offerors in §3-122-112, HAR. If compliance documents have not been submitted to the State Department of Defense prior to award, the lowest responsive offeror shall produce documents to the procurement officer to demonstrate compliance with this section.

HRS Chapter 237 tax clearance requirement for award and final payment. Instructions are as follows:

In accordance with Act 190 Amendment to HRS 103D-310(c)

Required as a prerequisite to entering into a contract, the contractor shall register on the Hawaii Compliance Express web site for all tax clearances by going to http://vendors.ehawaii.gov and registering there.

A Certificate of Vendor Compliance generated from this website should be included with their bid proposal. A Compliant status is required prior to awarding the contract.

A current Certificate of Vendor Compliance must accompany the invoice for final payment on the contract.

HRS Chapters 383 (Unemployment Insurance), 386 (Workers' Compensation), 392 (Temporary Disability Insurance), and 393 (Prepaid Health Care) requirements for award. Instructions are as follows:

Pursuant to §103D-310(c), HRS, The Certificate of Vendor Compliance must have a "Compliant" rating with the DLIR.

Compliance with Section 103D-310(c)(1) and (2), HRS.
Contractors are required to provide a state and federal tax clearance as a prerequisite to entering into a public contract of $2,500 or more. To meet this requirement, all bidders shall submit valid tax clearances with their bid proposals when the bid is $2,500 or more.

In accordance with Act 190 Amendment to HRS 103D-310(c), required as a prerequisite to entering into a contract, the contractor shall register on the Hawaii Compliance Express web site for all tax clearances by going to http://vendors.ehawaii.gov and registering there.

A Certificate of Vendor Compliance generated from this website shall be included with their bid proposal. A Compliant status is required prior to awarding the contract.

Failure to submit the required tax clearance will be sufficient grounds for the State to refuse to receive or consider the prospective bidder's proposal.

The Certificate of Vendor Compliance should be applied for as soon as possible. If a valid certificate is not submitted on a timely basis for award of a contract, an offer otherwise responsive and responsible may not receive the award.

Final Payment Requirements. A current Certificate of Vendor Compliance will be required for final payment.

SPECIAL PROVISIONS for Act 68, SLH 2010, as amended by Act 192, SLH 2011, CONSTRUCTION CONTRACTS

Definitions for terms used in HRS Chapter 103B as amended by Act 192, SLH 2011:

a. "Contract" means contracts for construction under 103D, HRS.

b. "Contractor" has the same meaning as in section 103D-104, HRS, provided that "contractor" includes a Subcontractor where applicable.

c. "Construction" has the same meaning as in section 103D-104, HRS.

d. "Procurement Officer" has the same meaning as in section 103D-104, HRS.

e. "Procurement Officer" has the same meaning as in Section 103D-104, HRS.

f. "Resident" means a person who is physically present in the State of Hawaii at the time the person claims to have established the person's domicile in the State of Hawaii and shows the person's intent is to make Hawaii the person's primary residence.

g. "Shortage trade" means a construction trade in which there is a shortage of Hawaii residents qualified to work in the trade as determined by the Department of Labor and Industrial Relations.

EMPLOYMENT OF STATE RESIDENTS REQUIREMENTS – HRS Chapter 103B as amended by Act 192, SLH 2011:

a. A Contractor awarded a contract shall ensure that Hawai' i residents comprise not less than 80% of the workforce employed to perform the contract work on the project. The 80 % requirement shall be determined by dividing the total number of hours worked on the contract by Hawai'i residents, by the total number of hours worked on the contract by all employees of the Contractor in the performance of the contract. The hours worked by any Subcontractor of the

Contractor shall count towards the calculation for this section. The hours worked by employees within shortage trades, as determined by the Department of Labor and Industrial Relations (DLIR), shall not be included in the calculation for this section.

b. Prior to award of a contract, an Offeror/Bidder may withdraw an offer/bid without penalty if the Offeror/Bidder finds that it is unable to comply with HRS Chapter 103B as amended by Act 192, SLH 2011.

c. Prior to starting any construction work, the Contractor shall submit the subcontract dollar amount for each of its Subcontractors.

d. The requirements of this section shall apply to any subcontract of $50,000 or more in connection with the Contractor, that is, such Subcontractors must also ensure that Hawaii residents compose not less than 80% of the Subcontractor's workforce used to perform the subcontract.

e. The Contractor and any Subcontractor whose subcontract is $50,000 or more shall comply with the requirements of HRS Chapter 103B as amended by Act 192, SLH 2011.

1. Certification of compliance shall be made in writing under oath by an officer of the General Contractor and applicable Subcontractors and submitted with the final payment request.

2. The certification of compliance shall be made under oath by an officer of the company by completing a "Certification of Compliance for Employment of State Residents" form and executing the Certificate before a licensed notary public.

3. In addition to the certification of compliance as indicated above, the Contractor and Subcontractors shall maintain records such as certified payrolls for laborers and mechanics who performed work at the site and time sheets for all other employees who performed work on the project. These records shall include the names, addresses and number of hours worked on the project by all employees of the Contractor and Subcontractor who performed work on the project to validate compliance with HRS Chapter 103B as amended by Act 192, SLH 2011. The Contractor and Subcontractors shall retain these records and provide access to the State for a minimum period of four (4) years after the final payment, except that if any litigation, claim, negotiation, investigation, audit or other action involving the records has been started before the expiration of the four-year period, the Contractor and Subcontractors shall retain the records until completion of the action and resolution of all issues that arise from it, ot until the end of the four-year period, whichever occurs later. Furthermore, it shall be the Contractor's responsibility to enforce compliance with this provision by any Subcontractor.

f. A General Contractor or applicable Subcontractor who fails to comply with this

·section shall be subject to any of the following sanctions:

1. With respect to the General Contractor, withholding of payment on the contract until the Contractor or its Subcontractor complies with HRS Chapter 103B as amended by Act 192, SLH 2011.

2. Proceedings for debarment or suspension of the Contractor or Subcontractor under Hawai'i Revised Statues §103D-702.

Conflict with Federal Law:

This section shall not apply if the application of this section is in conflict with any federal law, or if the application of this section will disqualify the State from receiving Federal funds or aid.

Davis-Bacon Act:

Davis-Bacon Act prevailing wage rates apply to all State of Hawaii Construction contracts over $2,000.00.

HAWAII ARMY NATIONAL GUARD B1788 BOILER ROOM IMPROVEMENTS, KALAELOA, OAHU, STATE OF HAWAII, DEPARTMENT OF DEFENSE, HAWAII ARMY NATIONAL GUARD, JOB NO. CA-202610-C

Adjutant General
State Department of Defense
3949 Diamond Head Road
Honolulu, Hawaii 96816-4495

Dear Sir:

The undersigned has carefully read and understands the terms and conditions specified in the Specifications, and all documents attached hereto, and hereby submits the following offer to perform the work specified herein, all in accordance with the true intent and meaning thereof. The undersigned further understands and agrees that by submitting this offer, 1) he/she is declaring his/her offer is not in violation of Chapter 84, Hawaii Revised Statutes, concerning prohibited State contracts, and 2) he/she is certifying that the price(s) submitted was (were) independently arrived at without collusion.

The undersigned represents: **(Check √ one only)**

- ☐ A **Hawaii business** incorporated or organized under the laws of the State of Hawaii; **OR**
- ☐ A **Compliant Non-Hawaii business** not incorporated or organized under the laws of the State of Hawaii. Business shall be registered prior to award at the State of Hawaii Department of Commerce and Consumer Affairs Business Registration Division to do business in the State of Hawaii. State of incorporation: _____

Offeror is:

☐ Sole Proprietor ☐ Partnership ☐ Corporation ☐ Joint Venture
☐ Other _____

Federal I.D. No.: _____
Hawaii General Excise Tax License I.D. No.: _____

Payment address (other than street address below): _____
City, State, Zip Code: _____

Business address (street address): _____
City, State, Zip Code: _____

Respectfully submitted:

(x) _____
Authorized (Original) Signature (*1)

Date: _____

_____
Name and Title (Please Type or Print)

Telephone No.:
_____

*_____
Exact Legal Name of Company (Offeror) (*2)

Fax No.: _____

(*2) If Offeror is a "dba" or a "division" of a corporation, furnish the exact legal name of the corporation under which the awarded contract will be executed:

E-mail Address:

_____ _____

(*1)
Original signature in ink. If unsigned or the affixed signature is a facsimile or a photocopy, the offer shall be automatically rejected unless accompanied by other material, containing an original signature, indicating the Offeror's intent to be bound.

The undersigned has carefully examined the attached plans and specifications and hereby proposes to furnish at his own expense all labor, materials, tools and equipment necessary to construct all work as shown and called for, in strict accordance with the specifications, schedules and drawings pertaining thereto, all for the LUMP SUM of the base contract:

_____ DOLLARS ($_____).

(Including the cost of delivery, unloading, freight charges, all applicable taxes, and other cost involved) and will fully complete all the work under this contract within **180** consecutive calendar days from the date of commencement specified by the written order of the Adjutant General including the date of said order.

NOTE:

1. This project falls under the requirement of the "Buy American Act".

2. Davis-Bacon Act prevailing wage rate or State wage rates apply to this contract.

3. Contract will be awarded based on the total lump sum bid.

4. A Site Visit/Pre-bid meeting will be held on **August 25, 2026 at 11:00 A.M.** Park on the road shoulder across the entrance gate. Contractors are to meet Major Randall Duldulao or Allied Security Guard at the entrance to 91-1001 Shangrila St #1787, Kapolei, HI 96707 prior to 11:00 am. Please register through HIePRO or email Major Randall Duldulao at randall.s.duldulao@hawaii.gov and Cc jesper.h.andersen@hawaii.gov before 10PM on Friday August 21, 2026, to register for the site visit. Provide your company information, attendees names, an email and a contact number, if you are intending to registered for the site visit. All interested bidders and sub-contractors are welcome but not required to attend.

5. Questions and Requests for Clarification regarding the Technical Specifications or any other aspect of the IFB must be submitted via HIePRO by **August 27, 2026**. Responses are scheduled to be posted on **September 4, 2026**. The Department of Defense, Engineering Office shall not be required to answer Questions or Requests for Clarification not submitted via HIePRO or received after the Questions and Requests for Clarification deadline.

6. The State reserves the right to determine the extent of the contract by selecting and/or omitting bid items (not necessarily in sequence) to the extent required to come within the funds available for the project. The award of the contract shall be made to the responsible bidder whose total bid is the lowest.

7. **CAMPAIGN CONTRIBUTIONS BY STATE AND COUNTY CONTRACTORS PROHIBITED**. If awarded a contract in response to this solicitation, offeror agrees to comply with HRS §11-355, which states that campaign contributions are prohibited from a State and County government contractor during the term of the contract if the

contractor is paid with funds appropriated by the legislative body between the execution of the contract through the completion of the contract.

8. The Surety shall not be held liable beyond two (2) years of the project acceptance date.

9. SUBMISSION PACKET**
   - Offer Form, signed
   - Copy of Bid Bond, Notarized*
   - Copy of Corporate Resolution or equal
   - Copy of the Certificate of Compliance of Employment of State Residents, Notarized*
   - Certificate of Participation in Approved Apprenticeship Program ACT 17 (Form 1)
   - Copy of applicable licenses for this project
   - Copy of Hawaii Compliance Express Certificate

**Lowest bidder is responsible to provide the original notarized documents upon request within 5 business days*.

***Copies of the forms can be found at: https://dod.hawaii.gov/hieng/forms/*

HAWAII PRODUCTS PREFERENCE

In accordance with ACT 174, SLH 2022, effective June 27, 2022, Hawaii Products Preference shall not apply to solicitations for public works construction. Therefore, the Hawaii Products Preference shall not apply to this project.

APPRENTICESHIP AGREEMENT PREFERENCE

The estimated value of the public works contract is $250,000 or more and the apprenticeship agreement preference pursuant to Hawaii Revised Statutes §103-55.6 (Act 17, SLH 2009) **shall apply**.

1. If applicable to this project, any bidder seeking the preference must be a party to an apprenticeship agreement registered with the State Department of Labor and Industrial Relations (DLIR) at the time the bid is submitted for each apprenticeable trade the bidder will employ to construct the project. "Employ" means the employment of a person in an employer-employee relationship.

    a. The apprenticeship agreement shall be registered with the DLIR and conform to the requirements of Hawaii Revised Statutes Chapter 372.

    b. Subcontractors do not have to be a party to an apprenticeship agreement for the bidder to obtain the preference.

    c. The bidder is not required to have apprentices in its employ at the time the bid is submitted to qualify for the preference.

2. A bidder seeking the preference must state the apprenticeable trade the bidder will employ for each trade to be employed to perform the work by submitting a completed **signed original** *Certification of Bidder's Participation – Form 1* verifying participation in an apprenticeship program registered with the DLIR. "Apprenticeable trade" shall have the same meaning as "apprenticeable occupation" pursuant to Hawaii Administrative Rules (HAR) §12-30-5.

    a. The *Certification of Bidder's Participation – Form 1 s*hall be authorized by an apprenticeship sponsor listed on the DLIR list of registered apprenticeship programs. "Sponsor" means an operator of an apprenticeship program and in whose name the program is approved and registered with the DLIR pursuant to HAR §12-30-1.

    b. The authorization shall be an original signature by an authorized official of the apprenticeship sponsor.

    c. The completed *Certification of Bidder's Participation – Form 1* for each trade must be submitted with the bid. A facsimile or copy is acceptable to be submitted with the bid, however the signed original must be submitted within five (5) working days of the bid open date. If the signed original is not received within this timeframe, the preference may be denied. Previous certifications shall not apply.

    d. When filling out the *Certification of Bidder's Participation – Form 1*, the name of Apprenticeable Trade and Apprenticeship Sponsor must be the same as recorded in the List of Construction Trades in Registered Apprenticeship Programs that is

posted on the State Department of Labor and Industrial Relations website. "Registered apprenticeship program" means a construction trade program approved by and registered with the DLIR pursuant to HAR § 12-30-1 and §12-30-4.

e. The *Certification of Bidder's Participation – Form 1* and the List of Construction Trades in Registered Apprenticeship Programs is available on the DLIR website at: http://hawaii.gov/labor/wdd

3. Upon receiving the *Certification of Bidder's participation – Form 1,* the Procurement Officer will verify that the apprenticeship program is on the List of Construction Trades in Registered Apprenticeship Programs and that the form is signed by an authorized official of the Apprenticeship Program Sponsor. If the programs and signature are not confirmed by the DLIR, the bidder will not qualify for the preference.

4. If the bidder is certified to participate in an apprenticeship program for each trade which will be employed by the bidder for the project, a preference will be applied to decrease the bidder's bid amount by five (5) percent for evaluation purposes.

5. Should the bidder qualify for other preferences (for example, Hawaii Products), all applicable preference shall be applied to the bid price.

6. If the winning bidder has submitted Form 1 with his bid packet, the Form 2 will be required the first week of each month for the prior month beginning with the month of the start of work.

CHARACTER OF WORKERS OR EQUIPMENT

The Contractor shall perform with his own organization, work amounting to not less than twenty percent (20%) of the total contract cost. The Engineer may require the Contractor to verify the percentage of work he will be providing with his own organization by furnishing pertinent information such as all of the actual subcontractor(s)' quotations he received for the bid. If requested, the Contractor shall provide such verification within 5 working days of the request.

CERTIFICATION FOR SAFETY AND HEALTH PROGRAM FOR BIDS IN EXCESS OF $100,000

In accordance with HRS 396-18, by submitting this proposal, the undersigned certifies that his company will have a written safety and health plan for this project that will be available and implemented by the Notice to Proceed date of this project. Details of the requirements of this plan may be obtained from the Department of Labor and Industrial Relations, Occupational Safety and Health Division (HIOSH).

TAX CLEARANCES FROM THE STATE DIRECTOR OF TAXATION AND INTERNAL REVENUE SERVICE

Contractors are required to provide a state and federal tax clearance as a prerequisite to entering into a public contract of $2,500 or more. To meet this requirement, all bidders shall submit valid tax clearances with their bid proposals when the bid is $2,500 or more.

Failure to submit the required tax clearance may be sufficient grounds for the State to refuse to receive or consider the prospective bidder's proposal.

In accordance with Act 190 Amendment to HRS 103D-310(c), required as a prerequisite to entering into a contract, the contractor shall register on the Hawaii Compliance Express web site for all tax clearances by going to http://vendors.ehawaii.gov and registering there.

A Certificate of Vendor Compliance generated from this website should be included with their bid proposal. A Compliant status is required prior to awarding the contract.

LICENSE

Due to the nature of the work contemplated, bidder must possess a valid State of Hawaii Contractor's license: **C-37.**

1. The Adjutant General or his designated representative reserves the right to reject any and/or all bids and waive any defects when, in his opinion, such rejection or waiver will be in the best interest of the State.

2. The award of the contract shall be conditioned upon funds being made available for these projects and further upon the right of the Adjutant General or his designated representative to hold all bids received for a period of ninety (90) days from the date of the opening thereof, unless otherwise required by law, during which time no bid may be withdrawn.

3. The liquidated damages per working day for failure to complete the work on time shall be at **$2,000.00** per working day or as stipulated in the General Conditions, whichever is higher.

4. By submitting this proposal, the undersigned is declaring his firm has not been assisted or represented on this matter by an individual who has, in a State capacity, been involved in the subject matter of this contract in the past two years.

5. Upon the acceptance of the proposal by the Adjutant General or his designated representative, the undersigned must enter into and execute a contract for the same and furnish a bond, as required by law. This bond shall conform to the provisions of Section 103D-324 of the Hawaii Revised Statutes and any law applicable thereto.

6. If the lowest bid received by the State exceeds the funds available for this project, the State reserves the right to negotiate with the lowest responsible bidder as permitted under Section 103D-302, Hawaii Revised Statutes, as amended, to reduce the scope of work and award a contract therefore.

7. This contract may be awarded as an informal contract as determined by the Adjutant General or his designated representative in accordance with the applicable Hawaii Revised Statutes as amended, whereby a purchase order will be executed and used as the formal contract.

   Receipt of the following addenda issued by the Department is acknowledged by the day(s) of the receipt indicated below:

Addendum No. 1 _____ Addendum No. 2 _____
Date Date

Addendum No. 3 _____ Addendum No. 4 _____
Date Date

It is understood that failure to receive any such addendum shall not relieve the Contractor from any obligation under this Proposal as submitted. (See Special Notice to Bidders for information regarding addenda.)

ALL JOINT CONTRACTORS & SUBCONTRACTORS TO ENGAGE ON THIS PROJECT

The bidder certifies that the following is a complete listing of all joint contractors or subcontractors covered under Chapter 444, Hawaii Revised Statutes, who will be engaged by the bidder on this project to perform the nature and scope of work indicated pursuant to Section 103D-302, Hawaii Revised Statutes, and understands that failure to comply with this requirement shall be just cause for rejection of the bid.

The bidder further certifies that only those joint contractors or subcontractors listed shall be allowed to perform work on this project and that all other work necessary shall be performed by the bidder with his own employees. If no joint contractor or subcontractor is listed, it shall be construed that all of the work shall be performed by the bidder with his own employees.

All bidders must be sure that they possess and that the subcontractors listed in the proposal possess all the necessary specialty licenses needed to perform the work for this project. The bidder shall be solely responsible for assuring that all of the specialty licenses required to perform the work is covered in his bid.

The bidder shall include the license number of the joint contractors or subcontractors listed below. Failure to provide the correct names and license numbers as registered with the Contractor's Licensing Board may cause rejection of the bid submitted.

Complete Firm Name of Joint Contractor or Subcontractor for Lump Sum Bid	License Number	Nature and Scope of Work to be performed

Enclosed herewith as required by law (Check Applicable Only):

- ☐ Surety Bond
- ☐ Certificate of Deposit
- ☐ Certified Check
- ☐ Cashier's Check
- ☐ Share Certificate
- ☐ Legal Tender

_____

_____ DOLLARS ($ _____).

_____
*Signature

Title _____

_____
Name of Company

_____
Address

_____

_____

Telephone _____

Date _____

HAWAII GENERAL EXCISE TAX

I.D. NO. _____

LICENSE CLASSIFICATION AND/OR SUBCLASSIFICATION NO.

_____

(CORPORATE SEAL)

*Please attach to this page evidence of the authority of this officer to submit bids on behalf of the Company, and also the names and residence addresses of all officers of the Company.

NOTE: Fill in all blank spaces with the information asked for or bid may be invalidated. PROPOSAL PAGES MUST BE INTACT; MISSING PAGES MAY INVALIDATE YOUR BID.

TABLE OF CONTENTS

Section/Subsection Page

ARTICLE 1 - DEFINITIONS 1

ARTICLE 2 - PROPOSAL REQUIREMENTS AND CONDITIONS

2.1 Qualification of Bidders 5
2.1.1 Notice of Intention to Bid 5
2.1.2 Compliance Certificate 5
2.1.3 Wrongful Refusal to Accept a Bid 6
2.2 Interpretation of Quantities in Bid Schedule 6
2.3 Contents of Proposal Forms 6
2.4 The Site and Proposed Contract Documents 6
2.5 Addenda and Bid Clarifications 7
2.5.3 Bid Discrepancy 7
2.6 Substitution of Materials and Equipment Before Bid Opening 7
2.6.3 Statement of Variances 7
2.6.4 Substitution Denial 7
2.7 Preparation of Proposal 7
2.8 Bid Security 8
2.9 Delivery of Proposals 9
2.10 Withdrawal or Revision of Proposal 9
2.10.1 Withdrawal of Proposals 9
2.10.2 Modification of Proposals 9
2.11 Public Opening of Proposals 9
2.12 Disqualification of Bidders 9
2.13 Protest 9

ARTICLE 3 - AWARD AND EXECUTION OF CONTRACT

3.1 Consideration of Proposals; Cancellation 10
3.2 Irregular Proposals 10
3.3 Correction of Bids and Withdrawal of Bids 10
3.4 Award of Contract 11
3.5 Cancellation of Award 11
3.6 Return of Bid Security 11
3.7 Requirement of Performance and Payment Bonds 11
3.8 Campaign Contributions by State and County Contractors 11
3.9 Execution of the Contract 11
3.10 Failure to Execute the Contract 12
3.11 Notice to Proceed 12

ARTICLE 4 - SCOPE OF WORK

4.1 Intent of Contract, Duty of Contractor 12
4.2 Changes 12
4.2.1 Minor Changes 12
4.2.2 Oral Orders 13
4.2.3 Field Orders 13
4.2.4 Change Orders 13
4.3 Duty of Contractor to Provide Proposal for changes 13

Section/Subsection Page

4.4 Price Adjustment 14
4.5 Allowances for Overhead and Profit 15
4.6 Payment for Deleted Material 15
4.6.1 Canceled Orders 15
4.6.2 Returned Materials 15
4.6.3 Uncancelled Materials 15
4.7 Variations in Estimated Quantities 15
4.8 Variations in Bottom Elevations 15
4.9 Differing Site Conditions 16
4.10 Utilities and Services 16
4.10.2 Unknown Utilities 16
4.10.4 Restoration of Damaged Utilities 16

ARTICLE 5 - CONTROL OF WORK

5.1 Authority of the Engineer 17
5.2 Authority of the Inspector 17
5.3 Authority of the Consultant(s) 17
5.4 Shop Drawings and Other Submittals 17
5.4.1.1 Shop Drawings 17
5.4.2 Submittal Variances 18
5.4.3 Review and Acceptance Process 18
5.5 Coordination of Contract Documents 19
5.5.1 Addenda 19
5.5.2 Special Conditions and Proposal 19
5.5.3 Specifications 19
5.5.4 Specification Error 19
5.5.5 Drawings 19
5.6 Interpretation of Drawings and Specifications 20
5.7 Examination of Drawings, Specifications, Project Site 20
5.8 Cooperation Between the Contractor and the Department 20
5.8.1 Furnishing Drawings and Specifications 20
5.8.2 Superintendent 20
5.8.3 Engineering Work 20
5.8.4 Use of Structure or Improvement 21
5.9 Inspection 21
5.9.2 Authority to Suspend Operations 21
5.9.4 Federal Agency Inspection 21
5.10 Removal of Defective, Non-Conforming and Unauthorized Work 21
5.10.2 Scheduling Corrective Work 22
5.10.3 Failure to Correct Work 22
5.11 Value Engineering Incentive 22
5.11.2 Value Engineering Change Proposal 22
5.11.3 VECP Required Information 22
5.11.4 Required Use of Licensed Architect or Engineer 22
5.11.6 Acceptance of VECP 22
5.11.7 VECP Price Adjustments 23
5.12 Subcontracts 23
5.12.1 Replacing Subcontractors 23
5.12.2 Notice of Replacing Subcontractor 23
5.12.4 Subcontracting 24

Section/Subsection Page

ARTICLE 6 - CONTROL OF MATERIALS AND EQUIPMENT

6.1 Materials and Equipment ... 24
6.2 Source of Supply and Quality of Materials ... 24
6.2.3 Engineer's Authorization to Test Materials ... 24
6.2.4 Unacceptable Materials ... 24
6.3 Substitution After Contract Award ... 24
6.3.2 Substitution After Contract Award ... 24
6.4 Asbestos Containing Materials ... 25
6.5 Test Samples ... 25
6.6 Material Samples ... 25
6.7 Non-Conforming Materials ... 26
6.8 Handling Materials ... 26
6.9 Storage of Materials ... 26
6.10 Property Rights in Materials ... 26
6.11 Assignment of Antitrust Claims for Overcharges for Goods Purchased ... 26

ARTICLE 7 - PROSECUTION AND PROGRESS

7.1 Prosecution of the Work ... 26
7.1.4 Working Prior to Notice to Proceed ... 26
7.2 Commencement Requirements ... 27
7.2.1 Identification of the Superintendent ... 27
7.2.2 Proposed Working Hours ... 27
7.2.3 Permits and Licenses ... 27
7.2.4 Schedule of Prices ... 27
7.2.5 Proof of Insurance Coverage ... 27
7.3 Insurance Requirements ... 27
7.3.1 Obligation of the Contractor ... 27
7.3.7 Types of Insurance ... 28
7.4 Permits and Licenses ... 28
7.5 Normal Working Hours ... 28
7.6 Hours of Labor ... 29
7.7 Prevailing Wages ... 29
7.7.2 Wage Rate Schedule ... 29
7.7.4 Posting Wage Rate Schedule ... 29
7.8 Failure to Pay Required Wages ... 29
7.9 Payrolls and Payroll Records ... 29
7.9A Apprenticeship Agreement Certification ... 30
7.10 Overtime and Night Work ... 30
7.10.2 Overtime Notification ... 30
7.11 Overtime and Night Payment for State Inspection Service ... 31
7.11.2 Payment for Inspection Services ... 31
7.12 Limitations of Operations ... 31
7.13 Assignment or Change of Name ... 31
7.13.1 Assignment ... 31
7.13.3 Recognition of a Successor in Interest; Assignment ... 32
7.13.4 Change of Name ... 32
7.14 Laws to be Observed ... 32
7.15 Patented Devices, Materials and Processes ... 32
7.16 Sanitary, Health and Safety Provisions ... 32
7.17 Protection of Persons and Property ... 33
7.17.1 Safety Precautions and Programs ... 33
7.17.8 Emergencies ... 33
7.18 Archaeological Sites ... 33
7.19 Responsibility for Damage Claims; Indemnity ... 34
7.20 Character of Workers or Equipment ... 34
7.20.2 Character and Proficiency of Workers ... 34
7.20.3 Insufficient Workers ... 34
7.20.4 Equipment Requirements ... 35
7.21 Contract Time ... 35
7.21.2 Calculation of Contract Time ... 35
7.21.3 Modifications of Contract Time ... 35
7.21.4 Delay for Permits ... 35
7.21.5 Delays Beyond Contractor's Control ... 35
7.21.6 Delays in Delivery of Materials ... 36
7.21.7 Delays for Suspension of Work ... 36
7.21.8 Contractor Caused Delays ... 36
7.21.9 Reduction in Time ... 37
7.22 Construction Schedule ... 37
7.23 Statement of Working Days ... 37
7.24 Suspension of Work ... 37
7.24.1 Procedure to be Followed ... 37
7.24.2 Partial, Total Suspension of Work ... 37
7.24.3 Payment ... 37
7.24.4 Claims Not Allowed ... 38
7.25 Disputes and Claims ... 38
7.25.1 Required Notification ... 38
7.25.2 Continued Performance of Work ... 38
7.25.4 Requirements for Notice of Claim ... 38
7.25.6 Final Statement for Claim ... 39
7.25.10 Decision on Claim / Appeal ... 39
7.25.11 Payment and Interest ... 39
7.26 Failure to Complete the Work on Time ... 39
7.26.2 Acceptance of Liquidated Damages ... 40
7.26.3 Payments for Performance Liquidated Damages ... 40
7.27 Termination of Contract for Cause ... 40
7.27.1 Default ... 40
7.27.2 Additional Rights and Remedies ... 40
7.27.3 Costs and Charges ... 40
7.27.4 Erroneous Termination for Cause ... 41
7.28 Termination for Convenience ... 41
7.28.1 Termination ... 41
7.28.2 Contractor's Obligations ... 41
7.28.3 Right to Construction and Goods ... 41
7.28.4 Compensation ... 41
7.29 Correcting Defects ... 42
7.30 Final Cleaning ... 42
7.31 Substantial Completion, and Final Inspection ... 42
7.31.1 Substantial Completion ... 42
7.31.2 Final Inspection ... 42
7.31.4 Revoking Substantial Completion ... 42
7.32 Project Acceptance Date ... 42
7.32.2 Protection and Maintenance ... 43
7.32.4 Punch List Requirements ... 43
7.32.7 Failure to Correct Deficiencies ... 43
7.33 Final Settlement of Contract ... 43

Section/Subsection Page
7.33.1 Necessary Submissions 43
7.33.2 Failure to Submit Closing Documents 43
7.34 Contractor's Responsibility for Work; Risk of Loss 43
7.35 Guarantee of Work 44
7.35.2 Repair of Work 44
7.35.3 Manufacturer's and Installer's Guarantee 44
7.36 Work of and Charges by Utilities 44
7.37 Right to Audit Records 44
7.38 Records Maintenance, Retention and Access 45

ARTICLE 8 - MEASUREMENT AND PAYMENT

8.1 Measurement of Quantities 45
8.2 No Waiver of Legal Rights 45
8.3 Payment for Additional Work 46
8.3.4 Force Account Method 46
8.4 Progress and / or Partial Payments 49
8.4.1 Progress Payments 49
8.4.3 Payments for Materials 49
8.5 Prompt Payment 49
8.6 Retainage 50
8.7 Warranty of Clear Title 51
8.8 Final Payment 51
8.9 Claims Arising out of Payment for Required Work 51

ARTICLE 9– CONFIDENTIALITY OF PERSONAL INFORMATION

9.1 Definitions……52
9.2 Confidentiality of Material……...52
9.3 Security Awareness Training and Confidentiality Agreements 52
9.4 Termination for Cause 52
9.5 Records Retention 52

SAMPLE FORMS

Request for Substitution
Name of Corporation
Weekly Quality Control Report Form

ARTICLE 1 - Definitions

Whenever the following terms or pronouns are used in these Bidding and Execution of Contract Requirements, and General Conditions, or in any contract documents or instruments where these Bidding and Execution of Contract Requirements, and General Conditions govern, the intent and meaning shall be interpreted as follows

1.1_ ADDENDUM (plural - Addenda) A written or graphic document, including Drawings and Specifications, issued by the Engineer during the bidding period which modify or interpret the bidding documents, by additions, deletions, clarifications or corrections which shall be considered and made a part of the bid proposal and the contract when executed.

1.2_ ADDITION (to the contract sum) Amount added to the contract Sum by Change Order.

1.3_ ADMINISTRATIVE RULES - Hawaii Administrative Rules for Chapter 103-D of the Hawaii Revised Statutes.

1.4_ ADMINISTRATOR - The Public Works Administrator, Department of Accounting and General Services

1.5_ ADVERTISEMENT - A public announcement soliciting bids or offers.

1.6_ AMENDMENT - A written document properly executed by the Contractor and DOD issued to amend the existing contract between the State and the Contractor.

1.7_ BAD WEATHER DAY - When weather or other conditions prevent a minimum of four hours of work with the Contractor's normal work force on controlling items of work at the site.

1.8_ BENEFICIAL OCCUPANCY - The point of project completion when the State can use the constructed facility in whole or in part for its intended purpose even though substantial completion may not be achieved.

1.9_ BID See OFFER

1.10_ BID SECURITY - The security furnished by the bidder from which the State may recover its damages in the event the bidder breaches its promise to enter into a contract with the State and fails to execute the required bonds covering the work contemplated, if its proposal is accepted.

1.11_ BIDDER - See Offeror

1.12_ BIDDING DOCUMENTS (or SOLICITATION DOCUMENTS) - The advertisement solicitation notice and instructions, Offer requirements, Offer forms, and the proposed contract documents including all addenda, and clarifications issued prior to receipt of the Offer.

1.13_ BULLETIN - A written notice to the Contractor requesting a price and / or time proposal for contemplated changes preparatory to the issuance of a field order or change order.

1.14_ BY OR TO THE ENGINEER - To avoid cumbersome and confusing repetition of expressions in these General Conditions, it is provided that whenever the following words or words of like import are used, they shall be understood as if they were followed by the words "by the Engineer" or "to the Engineer", unless the context clearly indicates another meaning: contemplated, required, determined, directed, specified, authorized, ordered, given, designated, indicated, considered necessary, deemed necessary, permitted, reserved, suspended, established, approval, approved, disapproved, acceptable, unacceptable, suitable, accepted, satisfactory, unsatisfactory, sufficient, insufficient, rejected or condemned.

1.15_ CALENDAR DAY - Any day shown on the calendar beginning at midnight and ending at midnight the following day. If no designation of calendar or working day is made, "day" shall mean calendar day.

1.16_ CHANGE ORDER - A written order signed by the Engineer that establishes the full payment and final settlement of all claims for direct, indirect and consequential costs, including costs of delays, and establishes any adjustments to contract time related to the work covered and affected by one or more field orders, or for change work done or agreed to be done without issuance of a separate field order. A change order signed by all the parties to the contract constitutes a supplemental agreement.

1.17_ COMPLETION - See SUBSTANTIAL COMPLETION and FINAL COMPLETION.

1.18_ COMPTROLLER - The Comptroller of the State of Hawaii, Department of Accounting and General Services.

1.19_ CONSULTANT - A person, firm or corporation having a contract with the State to furnish services with respect to the project

1.20_ CONTRACT - The written agreement between the Contractor and the State of Hawaii by its Adjutant General, by which the Contractor is bound to furnish all labor, equipment, and materials and to perform the specified work within the contract time stipulated, and by which the State of Hawaii is obligated to compensate the Contractor therefore at the prices set forth therein. The contract shall include the Contract Documents and also any and all amendments and change orders which are required to complete the construction in an acceptable manner.

1.21_ CONTRACT COMPLETION DATE - The calendar day on which all work on the project, required by the contract, must be completed. See CONTRACT TIME and FINAL COMPLETION.

1.22_ CONTRACT DOCUMENTS - The Contract, Addenda (which pertain to the Contract Documents, Contractor's Proposal (including Wage Schedule, List of Subcontractors and other documentation accompanying the Bid and any post bid documentation submitted prior to the Notice of Award) when attached as an exhibit to the Contract, the Notice to Proceed, the Bonds, these GENERAL CONDITIONS, the SPECIAL CONDITIONS, the Specifications and the Drawings as the same are more specifically identified in the Contract together with all written Amendments, Change Orders, Field Orders, a written order for minor changes in the work and Engineer's written interpretations and clarifications issued on or after the effective date of the Contract.

1.23_ CONTRACT PRICE - The amount designated on the face of the contract for the performance of work including allowances for extra if any.

1.24_ CONTRACT TIME (or CONTRACT DURATION) - The number of calendar (or working) days provided for completion of the contract, inclusive of authorized time extensions. The number of days shall begin running on the effective date in the Notice to Proceed. If in lieu of providing a number of calendar (or working) days, the contract requires completion by a certain date, the work shall be completed by that date.

1.25_ CONTRACTOR - Any individual, partnership, firm, corporation, joint venture, or other legal entity undertaking the execution of the work under the terms of the contract with the State of Hawaii, and acting directly or through its agents, or employees.

1.26_ DEPARTMENT - The Department of Defense, State of Hawaii (abbreviated DOD).

1.27_ DRAWINGS (or Plans) - The contract drawings in graphic or pictorial form, which show the design, location, character, dimensions and details of the Work to be done and which shall be a part of the Contract Documents.

1.28_ ENGINEER - The Department of Defense Engineer, or the authorized person to act in the Engineer's behalf.

1.29_ EQUAL OR APPROVED EQUAL - Whenever this term is used in the drawings or specifications, it shall be interpreted to mean a brand or article, prequalified in accordance with Section 6.3 SUBSTITUTION OF MATERIALS AND EQUIPMENT, that may be used in place of the one specified.

1.30_ FIELD ORDER - A written order issued by the Engineer or the Engineer's authorized representative to the Contractor requiring the contract work to be performed in accordance with a change or changes in the work. A field order may (1) establish a price adjustment and/or time adjustment in an amount the Engineer believes is reasonable for the change; or (2) may declare that the Engineer does not intend to adjust contract time or price for the work; or (3) may request the Contractor to submit a proposal for an adjustment to the contract time and/or price by a certain date.

1.31_ FINAL COMPLETION - The date set by the Engineer that all work required by the contract and any amendments or changes thereto is in full compliance with the contract.

1.32_ FORCE ACCOUNT - Term used when Work is ordered to be done without prior agreements as to lump sum or unit price cost thereof and is to be billed for at cost of labor, materials and

equipment, insurances, taxes, etc., plus an agreed percentage for overhead and profit.

1.33_ GUARANTEE - Legally enforceable assurance of the duration of satisfactory performance of quality of a product or Work

1.34_ GOODS - Materials. §103D-104

1.35_ HAZARDOUS MATERIALS - Any and all radioactive materials, asbestos, polychlorinated biphenyls, petroleum, crude oil, chemicals known to cause cancer or reproductive toxicity, pollutants, contaminants, toxic substances or materials cited in Hazardous Material Laws. Abandoned motor vehicles or parts thereof are not hazardous material.

1.36_ HOLIDAYS - The days of each year which are set apart and established as State holidays pursuant to Chapter 8, Hawaii Revised Statutes.

1.37_ INSPECTOR - The person assigned by the Engineer to make detailed inspections of contract performance and materials supplied for the work.

1.38_ LAWS - All Federal, State, City and County Laws, ordinances, rules and regulations, and standard specifications including any amendments thereto effective as of the date of the call for sealed bids.

1.39_ PERFORMANCE LIQUIDATED DAMAGES The amount prescribed in the General Conditions, Section 7.26 FAILURE TO COMPLETE THE WORK ON TIME to be paid to the State or to be deducted from any payments due or to become due the Contractor for each working day or calendar day (as applicable) delay in completing the whole or any specified portion of the work beyond the Contract Time.

1.40_ LETTER OF AWARD - A written notice from the Engineer to the successful bidder(s) stating that its proposal has been accepted by the State.

1.41_ MAJOR UNIT PRICE ITEM - A unit price item which, when extended on its estimated quantities in the proposal form, exceeds five percent (5%) of the total base bid proposal less any allowance and contingent items included in the proposal.

1.42_ NON-CONFORMING WORK - Work that does not fulfill the requirements of the Contract Documents.

1.43_ NOTICE TO CONTRACTORS – See Solicitation.

1.44_ NOTICE TO PROCEED - A written notice from the Contracting Officer to the Contractor advising it of the date on which it is to begin the prosecution of the Work, which date shall also be the beginning of Contract Time.

1.45_ POST CONTRACT DRAWINGS - Drawings issued after the award of the contract for the purpose of clarification and / or changes to the work indicated in the original drawings and which may be made a part of the contract.

1.46_ PROJECT ACCEPTANCE DATE - The calendar day on which the Engineer accepts the project as sufficiently completed in compliance with the contract so that the State can occupy or utilize the Work for its intended use. See SUBSTANTIAL COMPLETION.

1.47_ PROJECT CONTRACT LIMITS (or Contract Zone) - The portion of the site as delineated on the drawings which define the Contractor's primary area of operation for the prosecution of the work. It does not define the exact limits of all construction that may be required under the contract.

1.48_ PROJECT GUARANTEE - A guarantee issued by the Contractor to the State. See GUARANTEE.

1.49_ PROPOSAL (Bid) – See Offer (or Bid).

1.50_ PROPOSAL FORM – See Offer Form (or Bid Form).

1.51_ PUNCH LIST - A list compiled by the Engineer (or Contractor) stating work yet to be completed or corrected by the Contractor in order to substantially complete or finally complete the contract requirements.

1.52_ QUESTIONNAIRE - The specified forms on which the bidder shall furnish required information as to its ability to perform and finance the work.

1.53_ SHOP DRAWINGS - All drawings, diagrams illustrations, schedules and other data or information which are specifically prepared or

assembled by or for Contractor and submitted by Contractor to illustrate some portion of the Work.

1.54_ SPECIAL CONDITIONS - Supplements or modifies the standard clauses of the GENERAL CONDITIONS setting forth conditions or requirements peculiar to the individual project under consideration, which are not thoroughly or satisfactorily covered, described or explained in these GENERAL CONDITIONS.

1.55_ SPECIFICATIONS - That portion of the Contract Documents consisting of written descriptions for materials, equipment, construction systems, standards, workmanship, directions, provisions and requirements that pertain to the method and manner of performing the work and certain administrative requirements applicable thereto.

1.56_ STATE - The State of Hawaii acting through its authorized representative.

1.57_ SUBCONTRACT - Any written agreement between the Contractor and its subcontractors which contains the conditions under which the subcontractor is to perform a portion of the work for the Contractor.

1.58_ SUBCONTRACTOR - An individual, partnership, firm, corporation, joint venture or other legal entity, as covered in Chapter 444, Hawaii Revised Statutes, which enters into an agreement with the Contractor to perform a portion of the work for the Contractor.

1.59_ SUBSTANTIAL COMPLETION - The status of the project when the Contractor has completed all the work and 1) all utilities and services are connected and working, 2) all equipment is in acceptable working condition, 3) additional activity by the Contractor to correct punch list items as described herein will not prevent or disrupt use of the work or the facility in which the work is located, and 4) the building, structure, improvement or facility can be used for its intended purpose.

1.60_ SUPERINTENDENT - The employee of the Contractor who is charged with the responsibility of all the Work.

1.61_ SURETY - The qualified individual, firm or corporation other than the Contractor, which executes a bond with and for the Contractor to insure its acceptable performance of the contract.

1.62_ UNUSUALLY SEVERE WEATHER Uncommonly harsh weather including but not limited to hurricanes, tornados, tropical storms and tropical depressions, or as otherwise defined in the SPECIAL CONDITIONS.

1.63_ WORK - The furnishing of all labor, materials, equipment, and other incidentals necessary or convenient for the successful completion of the project and the execution of all the duties and obligations imposed by the contract.

1.64_ WORKING DAY - A calendar day, exclusive of Saturdays, Sundays and State-recognized legal holidays for the month in question.

1.65_ OFFER (or Bid) – The executed document submitted by an Offeror in response to a solicitation request, to perform the work required by the proposed contract documents, for the price quoted and within the time allotted.

1.66_ OFFEROR (or BIDDER) – Any individual, partnership, firm, corporation, joint venture or other legal entity submitting directly or through a duly authorized representative or agent, an Offer for the work or construction contemplated.

1.67_ OFFER FORM (or BID FORM) – The form prepared by the Department on which the Offeror submits the written offer or bid. By submitting an offer or bid, the Offeror adopt the language on the form as its own.

1.68_ PROJECT START DATE – The date established in the Notice to Proceed when the Contractor shall begin prosecution of the work and the start of contract time.

1.69_ SOLICITATION – An Invitation to Bid or Request for Proposals or any other document issued by the Department to solicit bids or offers to perform a contract. The solicitation may indicate the time and place to receive the bids or offers and the location, nature and character of the work, construction or materials to be provided.

ABBREVIATIONS

HAR Hawaii Administrative Rules

HRS Hawaii Revised Statutes

VECP Value Engineering cost Proposal

DOTAX State Department of Taxation

IRS Internal Revenue Service

BIDDING AND EXECUTION OF CONTRACT REQUIREMENTS

ARTICLE 2 - Proposal Requirements and Conditions

2.1 QUALIFICATION OF BIDDERS Prospective bidders must be capable of performing the work for which bids are invited, and must be capable of entering into a public contract of $25,000 or more.

2.1.1 Notice of Intention to Bid

2.1.1.1 In accordance with Section 103D-310, Hawaii Revised Statutes, and Section 3-122-111, Hawaii Administrative Rules, a written notice of intention to bid need not be filed for construction of any public building or public work. A written notice of intention to bid need not be filed for mere furnishing and installing of furniture, equipment, appliances, material and any combination of these items when a Contractor's license is not required under Chapter 444 of the Hawaii Revised Statutes, as amended, and the rules and regulations of the Contractor's License Board.

2.1.1.2 If two (2) or more prospective bidders desire to bid jointly as a joint venture on a single project, they must file an affidavit of joint venture. Such affidavit of joint venture will be valid only for the specific project for which it is filed. No further license is required when all parties to the joint venture possess current and appropriate contractor's licenses. Joint ventures are required to be licensed in accordance with Chapter 444 of the Hawaii Revised Statutes, as amended, and the rules and regulations of the Contractor's License Board when any party to the joint venture agreement does not hold a current or appropriate contractor's license. The joint venture must register with the office of the Director of Commerce and Consumer Affairs in accordance with Chapter 425 of the Hawaii Revised Statutes, as amended.

2.1.1.3 No persons, firm or corporation may bid where (1) the person, firm, or corporation, or (2) a corporation owned substantially by the person, firm, or corporation, or (3) a substantial stockholder or an officer of the corporation, or (4) a partner or substantial investor in the firm is in arrears in any payment owed to the State of Hawaii or any of its political subdivisions or is in default of any obligation to the State of Hawaii or to all or to any of its political subdivisions, including default as a surety or failure to perform faithfully and diligently any previous contract with the Department.

2.1.1.4 The Engineer may, in accordance with Section 103D-310 Hawaii Revised Statutes, require the prospective Bidder to submit answers to questions contained in the STANDARD QUALIFICATION QUESTIONNAIRE FOR PROSPECTIVE BIDDERS ON PUBLIC WORKS CONTRACTS, on the form provided by the Department, properly executed and notarized, setting forth a complete statement of the experience of such prospective Bidder and its organization in performing similar work and a statement of the equipment proposed to be used, together with adequate proof of the availability of such equipment, at least two (2) working days prior to the time advertised for the opening of bids. If the information in the questionnaire proves satisfactory, the Bidder's proposal will be received. All information contained in the answers to the questionnaire shall be kept confidential. The questionnaire will be returned to the Bidder after it has served its purpose.

2.1.1.5 If upon review of the Questionnaire, or otherwise, the Bidder appears not fully qualified or able to perform the intended work, the Engineer shall, after affording the Bidder an opportunity to be heard and if still of the opinion that the Bidder is not fully qualified to perform the work, refuse to receive or to consider any bid offered by the prospective Bidder.

2.1.1.6 Failure to complete and submit the prequalification questionnaire by the designated deadline will be sufficient cause for the Department to disqualify a prospective Bidder.

2.1.2 Compliance Certificate § 103D -310(c) HRS)

2.1.2.1 Contractors are required to provide proof of compliance in order to receive a contract of $25,000 or more. To meet this requirement, Offerors may apply and register at the "Hawaii Compliance Express" website: http://vendors.ehawaii.gov/hce/splash/welcome/html

2.1.2.2 Tax clearances may be obtained by completing the Tax Clearance Application (Form A-6) and submitting it to the Hawaii State Department of Taxation (DOTAX) or the Internal Revenue Service (IRS). The application may be obtained from the DOTAX, or the IRS. The application may be mailed in or walked in to either the DOTAX or the IRS. Both tax agencies encourage the use of their mail-in process, which should

be completed within twenty-one (21) calendar days. Tax clearance certificates will be issued to the applicant upon determination that the applicant has filed all tax returns due, and has paid all amounts owing on such returns, including penalty and interest.

2.1.2.3 Only original tax clearance certificates or certified copies will be accepted for this purpose. Failure to submit the required tax clearance certificates may be sufficient grounds for the Department to refuse to receive or consider the prospective bidder's proposal.

2.1.2.4 Tax clearance certificates are valid for six (6) months. The six-month period will begin with the later approval date stamped on the tax clearance. An original copy of a tax clearance that bears an original green certified copy stamp will be accepted by the Department for final payment. The period of validity is two months.

2.1.2.5 The tax clearances submitted with the bid proposals must be valid on the solicitation's first legal advertisement date or any date thereafter up to the bid opening date. Valid tax clearances submitted with the proposal will remain valid for the contract award and encumbrance.

2.1.2.6 Any person, firm or corporation that is not presently doing business in the State of Hawaii and submits a Notice of Intention to Bid must submit along with said Notice of Intention to Bid a certified letter stating that said person, firm or corporation is not doing business in the State of Hawaii and is not in default of any obligations due to the State or any of its political subdivisions.

2.1.2.7 If a business cannot obtain a tax clearance certificate because of tax delinquencies, it may submit a "special letter" from DOTAX and/or the IRS. The "special letter" may only be obtained if (1) the business has an existing installment agreement with the tax agency, or (2) the delinquency is the subject of an administrative or judicial appeal. The bidder is cautioned that the "special letter" from the IRS must be certified by DOTAX. All conditions applied to tax clearance certificates for this purpose are applicable to these "special letters". Instructions to obtain the "special letter" are available from each respective tax agency.

2.1.2.8 Various combinations of tax clearance certificates and "special letters" are acceptable for this purpose as follows: Tax clearance certificate signed by both tax agencies;

(a) Individual tax clearance certificates from each tax agency, respectively;

(b) Tax clearance certificate from one tax agency and a "special letter" from the other tax agency;

(c) "Special letters" from both tax agencies.

2.1.3 Wrongful Refusal to Accept a Bid - In the event the Engineer, for any reason, wrongfully refuses to accept what would otherwise be a responsive and responsible lowest bid, the exclusive remedy for such lowest bidder shall be the recovery of the reasonable actual costs of preparing the bid. No other bidder shall have any claim for damages. Refer to 2.13 PROTEST.

2.2 INTERPRETATION OF QUANTITIES IN BID SCHEDULE

2.2.1 When quantities for individual items of work are listed in the proposal form for which respective unit prices are asked, said quantities are estimated or approximate and are to be used by the Department only for the purpose of comparing on a uniform basis bids offered for the work. The Department does not, expressly or by implication, agree that the actual quantity of work will correspond therewith.

2.2.2 After determining the low bidder by comparison of bids submitted in accordance with the proposal form and Section 3.1 CONSIDERATION OF PROPOSALS; CANCELLATION in these specifications, the quantities of unit price items of work may increase or decrease.

2.2.3 On unit price bids, payment will be made only for the actual number of units incorporated into the finished project at the unit price bid, subject to Section 4.7 VARIATIONS IN ESTIMATED QUANTITIES.

2.3 CONTENTS OF PROPOSAL FORMS

2.3.1 Prospective bidders will be furnished with proposal forms giving the location, description, and the contract time of the work contemplated for which a lump sum bid price is asked or containing a schedule of items, together with estimated quantities of work to be performed and materials to be furnished, for which unit bid prices and/or lump sum bid prices are asked.

2.3.2 All papers bound with or attached to the proposal form shall be considered a part thereof and shall not be detached or altered when the proposal is submitted.

2.3.3 The drawings, specifications and other documents designated in the proposal form, will also be considered a part thereof whether attached or not.

2.3.4 By submitting a bid on the proposal form, a bidder accepts the language therein as its own.

2.4 THE SITE AND PROPOSED CONTRACT DOCUMENTS

2.4.1 The Bidder shall examine carefully the Project Site contemplated and the proposal, drawings, specifications, supplemental specifications, SPECIAL CONDITIONS, and any documents or items referenced therein and contract and bond forms therefore. The submission of a bid shall be considered as a warranty that the Bidder has made such examination and is informed of the conditions to be encountered in performing the Work and of the requirements of the drawings, specifications, supplemental specifications, SPECIAL CONDITIONS and any documents and items referenced therein, and contract and bonds.

2.5 ADDENDA AND BID CLARIFICATIONS

2.5.1 The terms and requirements of the bid documents (i.e. drawings, specifications and other bid and contract documents) cannot be changed prior to the bid opening except by a duly issued addenda or bid clarification.

2.5.2 The Department may alter, increase or decrease the scope of the work or the contract time, provisions and conditions by issuing a written addendum which sets forth such alterations, increase or decrease.

2.5.3 Bid Discrepancy - If a bidder discovers what it considers to be a discrepancy, ambiguity, omission or doubt as to the meaning of drawings, specifications and any other bid or contract documents, the bidder shall request in writing no later than 14 days before the bids are opened.

2.5.4 Addenda to the bid documents will be provided to all prospective bidders at the respective offices furnished for such purposes. Each addendum shall be an addition to the Contract Documents.

2.5.5 Upon providing an addenda, all bidders shall be deemed to be on notice of the information therein whether or not the addendum or bid clarification is actually received. All addenda and bid clarifications so issued shall become part of the Contract Documents.

2.5.6 No claim for additional compensation and/or time for performance will be allowed if the Contractor discovered, or in the exercise of reasonable care, should have discovered a discrepancy, ambiguity, omission or doubt for which an interpretation was not requested.

2.6 SUBSTITUTION OF MATERIALS AND EQUIPMENT BEFORE BID OPENING

2.6.1 Brand names of materials or equipment are specified or shown on the drawings to indicate a quality, style, appearance or performance and not to limit competition. The Bidder shall base its bid on one of the specified brand names unless alternate brands are qualified as equal or better in an addendum. Qualifications of such proposed alternate brands shall be submitted in writing and addressed to the Engineer. The face of the envelope containing the request must be clearly marked "SUBSTITUTION REQUEST". The request may be hand carried to the Department of Defense, State of Hawaii, 3949 Diamond Head Road, Honolulu, HI 96816-4495, or mailed. In either case, the written request must be received no later than the time and date specified in the NOTICE TO BIDDERS. The written request will be time stamped by the Department. For the purpose of this section, the time designated by the time stamping device in the Engineering Office shall be official. If the written request is hand carried, the bearer is responsible to ensure that the request is time stamped by the Engineering Office.

2.6.2 Submit three (3) sets of the written request, technical brochures, and a statement of variances. Refer to the Appendix for the Sample "Request for Substitution."

2.6.3 Statement of Variances - The statement of variances must list all features of the proposed substitution which differ from the drawings, specifications and / or product(s) specified and must further certify that the substitution has no other variant features. The brochure and information submitted shall be clearly marked showing make, model, size, options, etc., and must include sufficient evidence to evaluate each feature listed as a variance. A request will be denied if submitted without sufficient evidence. If after installing the substituted product, an unlisted variance is discovered, Contractor shall immediately replace the product with a specified product all at no cost to the State

2.6.4 Substitution Denial - Any substitution request not complying with the above requirements will be denied. Substitution requests sent to other agencies and received by the Engineering Office after the deadline above will be denied.

2.6.5 An addendum shall be issued to inform all prospective bidders of any accepted substitution in accordance with Section 2.5 ADDENDA AND BID CLARIFICATIONS.

2.6.6 For substitutions of materials and equipment after issuance of the Letter of Award, refer to Section 6.3 SUBSTITUTION OF MATERIALS AND EQUIPMENT AFTER BID OPENING.

2.7 PREPARATION OF PROPOSAL

2.7.1 The Bidder's proposal must be submitted on the proposal form furnished by the Department. The proposal must be prepared in full accordance with the instructions thereon. The Bidder must state, both in words and numerals, the lump sum price or total sum bid at which the work contemplated is proposed to be done. These prices must be written in ink or typed. In case of a discrepancy between the prices written in words and those written in figures, the words shall govern over the figures. The Bidder shall sign the proposal in the spaces provided with ink. By submitting a bid, the Bidder adopts the language of the proposal as its own.

2.7.2 If the proposal is made by an individual, the person's name and post office address must be shown in the space provided. If made by a partnership the name and post office address of each member of the partnership must be shown and the proposal signed by all partners or evidence in the form of a partnership agreement must be submitted showing the authority of the partner to enter, on behalf of said partnership, into contract with the State. If made by a corporation the proposal must show the name, titles, and business address of the president, secretary and treasurer and also evidence in the form of a corporate resolution must be submitted showing the authority of the particular corporate representative to enter on behalf of said corporation into contract with the State. If made by a joint venture the name and post office address of each member of the individual firm, partnership or corporation comprising the joint-venture must be shown with other pertinent information required of individuals, partnerships or corporations as the case may be. The proposal must be signed by all parties to the joint-venture or evidence in the form of a Joint-Venture Agreement must be submitted showing the authority of the joint-venture's representative to enter on behalf of said joint-venture into contract with the State.

2.7.3 Pursuant to the requirements of Section 103D-302, HRS, each Bidder shall include in its bid the name of each person or firm to be engaged by the Bidder on the project as joint contractor or subcontractor indicating also the nature and scope of work to be performed by such
joint contractor and/or subcontractor and their respective contractor's license number. If the Bidder fails to list a joint contractor or subcontractor, the State may accept the bid if it is in the State's best interest and the value of the work to be performed by the joint contractor or subcontractor is equal to or less than one percent of the total bid amount. The Bidder shall be solely responsible for verifying that their joint contractor or subcontractor has the proper license at the time of the submitted bid.

2.8 BID SECURITY §3-122-223(d) HAR

2.8.1 Subject to the exceptions in Section 3-122-223(d) HAR, all lump sum bids of $25,000 and higher, or lump sum base bids including alternates of $25,000 and higher, that are not accompanied by bid security are non-responsive. Bid security shall be one of the following: §3-122-222(a) HAR

2.8.1.1 Surety bid bond underwritten by a company licensed to issue bonds in this State which shall be substantially in the form of the Surety Bid Bond form in the Appendix; or

2.8.1.2 Legal Tender; or

2.8.1.3 Certificate of Deposit; Credit Union share certificate; or cashier's, treasurer's, teller's or official check drawn by, or a certified check accepted by, and payable on demand to the State by a bank, a savings institution, or credit union insured by the Federal Deposit Insurance Corporation or the National Credit Union Administration.

(a) These instruments may be utilized only to a maximum of $100,000.

(b) If the required security or bond amount totals over $100,000, more than one instrument not exceeding $100,000 each and issued by different financial institutions shall be accepted.

(c) **CAUTION** - Bidders are cautioned that certificates of deposit or share certificates with an early withdrawal penalty must have a face value sufficient to cover the maximum penalty amount in addition to the proposal guaranty requirement. If the certificate is made out to two names, the certificate must be assigned unconditionally to the Department of Defense.

2.8.2 Unless otherwise stated, the bid security shall be in an amount equal to at least five percent (5%) of the lump sum bid or lump sum base bid including alternates or in an amount required by the terms of the federal funding, where applicable.

2.8.3 If the Bidder is a corporation, evidence in the form of a corporate resolution, authorizing the corporate representative to execute the bond must be submitted with the proposal. (See sample in Appendix.) If the Bidder is a partnership, all partners must sign the bond

or evidence in the form of a partnership agreement must be submitted showing the authority of the partner.

2.8.4 If the Bidder is a joint -venture, all parties to the joint venture must sign the bond; provided, that one party to the joint-venture may sign on behalf of the joint-venture if evidence in the form of a joint-venture agreement or power of attorney, is submitted showing the authority of the signatory to sign the bond on behalf of the joint-venture.

2.8.5 In the case where the award will be made on a group or item basis, the amount of bid security shall be based on the total bid for all groups or items submitted.

2.8.6 Bidders are cautioned that surety bid bonds which place a limit in value to the difference between the bid amount and the next acceptable bid, such value not to exceed the purported amount of the bond, are not acceptable. Also, surety bid bonds which place a time limit on the right of the State to make claim other than allowed by statutes or these GENERAL CONDITIONS are not acceptable. Bidders are hereby notified that a surety bid bond containing such limitation(s) is not acceptable and a bid accompanied by such surety bid bond will be automatically rejected.

2.9 DELIVERY OF PROPOSALS - The entire proposal shall be placed together with the bid security, in a sealed envelope so marked as to indicate the identity of the project, the project number, the date of bid opening and the name and address of the bidder and then delivered as indicated in the Notice to Contractors. Bids which do not comply with this requirement may not be considered. Proposals will be received up to the time fixed in the public notice for opening of bids and must be in the hands of the official by the time indicated. The words "SEALED BID" must be clearly written or typed on the face of the sealed envelope containing the proposal and bid security.

2.10 WITHDRAWAL OR REVISION OF PROPOSAL - may be modified prior to the deadline to submit the offers by any of the following documents.

2.10.1 Withdrawal of Proposals:

2.10.1.1 A signed, written notice received in the office designated in the solicitation; or

2.10.1.2 A written notice faxed to the office designated in the solicitation; or

2.10.1.3 A telegraphic message received by telephone by the office designated in the solicitation from the receiving telegraph company office, provided the telegraph company confirms the telephone message by sending a written copy of the telegram showing that the message was received at such office prior to the time and date set for the opening.

2.10.2 Modification of Proposals:

2.10.2.1 A written notice received in the office designated in the solicitation, stating that a modification to the offer is submitted; and

2.10.2.2 The actual modification sealed securely in a separate envelope or container, accompanying the written notice.

2.11 PUBLIC OPENING OF PROPOSALS - Proposals will be opened and read publicly at the time and place indicated in the Notice to Contractors. Bidders, their authorized agents and other interested parties are invited to be present.

2.12 DISQUALIFICATION OF BIDDERS - Any one or more of the following causes will be considered as sufficient for the disqualification of a Bidder and the rejection of its proposal or proposals:

2.12.1 Non-compliance with Section 2.1 QUALIFICATION OF BIDDERS.

2.12.2 Evidence of collusion among bidders.

2.12.3 Lack of responsibility and cooperation as shown by past work such as failing to complete all of the requirements to close the project within a reasonable time or engaging in a pattern of unreasonable or frivolous claims for extra compensation.

2.12.4 Being in arrears on existing contracts with the State of Hawaii, or having defaulted on a previous contract with the State of Hawaii.

2.12.5 Lack of proper equipment and/or sufficient experience to perform the work contemplated, as revealed by the Standard Questionnaire and Financial Statement for Bidders.

2.12.6 No contractor's license or a contractor's license which does not cover type of work contemplated.

2.12.7 More than one proposal for the same work from an individual, firm, partnership, corporation or joint venture under the same or different name.

2.12.8 Delivery of bids after the deadline specified in the advertisement calling for bids.

2.12.9 Failure to pay, or satisfactorily settle, all bills overdue for labor and materials of former contracts in force at the time of issuance of proposal forms.

2.12.10 Debarment or suspension pursuant to the provisions of Chapters 103D, 104 and 444, Hawaii Revised Statutes, as amended.

2.13 PROTEST

2.13.1 Protests shall be adjudicated in accordance with §103D-701, HRS and as amended.

2.13.2 No Protest based upon the contents of the solicitation shall be considered unless it is submitted in writing to the Engineer, prior to the date set for the receipt of proposals.

2.13.3 A protest of an award or proposed award pursuant to §103D-302 or §103D-303, HRS, shall be submitted in writing to the Engineer within five (5) working days after the posting of the award of the Contract.

2.13.4 In addition to any other relief, when a protest is sustained and the protestor should have been awarded the contract under the solicitation but is not, then the protestor shall be entitled to the actual costs reasonably incurred in connection with the solicitation, including bid or proposal preparation costs but not attorney's fees.

ARTICLE 3 - Award and Execution of Contract

3.1 CONSIDERATION OF PROPOSALS; CANCELLATION - After the proposals are opened and read, the figures will be extended and/or totaled in accordance with the bid prices of the acceptable proposals and the totals will be compared and the results of such comparison shall be made public. In the event of a tie bid, the low bidder shall be determined by lot. In the comparison of bids, words written in the proposals will govern over figures and unit prices will govern over totals. Until the award of the contract, the Department may cancel the solicitation, reject any and all proposals in whole or part and may waive any defects or technicalities whenever such action is deemed to be in the best interest of the State.

3.2 IRREGULAR PROPOSALS - Proposals will be considered irregular and may be rejected for the following reasons:

3.2.1 If the proposal is unsigned.

3.2.2 If bid security is not in accordance with Section 2.8 BID SECURITY.

3.2.3 If proposal is on a form other than that furnished by the Department; or if the form is altered or any part thereof detached.

3.2.4 If the proposal shows any non-compliance with applicable law, alteration of form, additions not called, conditional bids, incomplete bids, non initialed erasures, other defects, or if the prices are obviously unbalanced.

3.2.5 If the Bidder adds any provisions reserving the right to accept or reject an award.

3.2.6 If the Bidder adds any provisions reserving the right to enter into a contract pursuant to an award.

3.2.7 When a proposal is signed by an officer or officers of a corporation and a currently certified corporate resolution authorizing such signer(s) to submit such proposal is not submitted with the proposal or when the proposal is signed by an agent other than the officer or officers of a corporation or a member of a partnership and a power of attorney is not submitted with the proposal.

3.2.8 Where there is an incomplete or ambiguous listing of joint contractors and/or subcontractors the proposal may be rejected. All work which is not listed as being performed by joint contractors and/or subcontractors must be performed by the bidder with its own employees. Additions to the list of joint contractors or subcontractors will not be allowed. Whenever there is a doubt as to the completeness of the list, the Bidder will be required to submit within five (5) working days, a written confirmation that the work in question will be performed with its own work force. Whenever there is more than one joint contractor and/or subcontractor listed for the same item of work, the Bidder will be required to either confirm in writing within five (5) working days that all joint contractors or subcontractors listed will actually be engaged on the project or obtain within five (5) working days written releases from those joint contractors and/or subcontractors who will not be engaged.

3.2.9 If in the opinion of the Engineer, the Bidder and its listed subcontractors do not have the contractor's licenses or combination of contractor's licenses necessary to complete all of the work.

3.3 CORRECTION OF BIDS AND WITHDRAWAL OF BIDS §3-122-31 HAR

3.3.1 Corrections to bids after bid openings but prior to award may be made under the following conditions:

3.3.1.1 If the mistake is attributable to an arithmetical error, the Engineer shall so correct the mistake. In case of error in extension of bid price, the unit price shall govern.

3.3.1.2 If the mistake is a minor informality which shall not affect price, quantity, quality, delivery, or contractual conditions, the Bidder shall request correction by submitting proof of evidentiary value which demonstrates that a mistake was made. The Engineer shall prepare a written approval or denial in response to this request. Examples of such mistakes include:

(a) Typographical errors;

(b) Transposition errors;

(c) Failure of a Bidder to sign the bid, but only if the unsigned bid is accompanied by other material indicating the Bidder's intent to be bound.

3.3.1.3 For reasons not allowable under paragraphs 3.3.1.1 and 3.3.1.2 when the Engineer determines that the correction or waiver of an obvious mistake is in the best interest of the Department or is warranted for the fair treatment of other bidders.

3.3.2 Withdrawal of bids after bid opening but prior to award may be made when the bid contains a mistake attributable to an obvious error which affects price, quantity, quality, delivery, or contractual conditions, and the bidder requests withdrawal by submitting proof of evidentiary value which demonstrates that a mistake was made. The Contracting Officer shall prepare a written approval or denial in response to this request.

3.3.3 Correction or withdrawal of bids after award is not permissible except in response to a written withdrawal or correction request by the Contractor, and the Engineer makes a written determination that the Department's procurement practices and policies would not be materially affected by such correction or withdrawal.

3.4 AWARD OF CONTRACT

3.4.1 The award of contract, if it be awarded, will be made within ninety (90) consecutive calendar days after the opening of the proposals to the lowest responsible and responsive Bidder (including the alternate or alternates which may be selected by the Engineer in the case of alternate bids) whose proposal complies with all the requirements prescribed, but in no case will an award be made until all necessary investigations are made. The successful Bidder will be notified, by letter mailed to the address shown on the proposal, that its bid has been accepted and that it has been awarded the contract.

3.4.2 If the contract is not awarded within the ninety (90) days noted in paragraph 3.4.1 above, the Department may request the successful Bidder to extend the time for the acceptance of its bid. The Bidder may reject such a request without penalty; and in such case, the Department may at its sole discretion make a similar offer to the next lowest responsive and responsible bidder and so on until a bid is duly accepted or until the Department elects to stop making such requests.

3.4.3 No contract will be awarded to any person or firm suspended or debarred under the provisions of Chapters 103D, 104 and Chapter 444, Hawaii Revised Statutes as amended.

3.4.4 The contract will be drawn on the forms furnished by the Comptroller. The contract will not be binding upon the Department until all required signatures have been affixed thereto and written certification that funds are available for the work has been made.

3.5 CANCELLATION OF AWARD - The Department reserves the right to cancel the award of any contract at any time before the execution of said contract by all parties. The exclusive remedy to the awardee for such cancellation shall be payment of the reasonable bid preparation costs and the reimbursement of any direct expenses incurred as directed in the Notice of Award. Such cancellation will not incur any liability by the Department to any other Bidder.

3.6 RETURN OF BID SECURITY - All bid securities, except those of the four (4) lowest Bidders, will be returned following the opening and checking of the proposals. The retained bid securities of the four lowest Bidders will be returned within five (5) working days following the complete execution of the contract.

3.7 REQUIREMENT OF PERFORMANCE AND PAYMENT BONDS

3.7.1 Performance and Payment Bonds shall be required for contracts $25,000 and higher. At the time of the execution of the contract, the successful Bidder shall file good and sufficient performance and payment bonds on the form furnished by the Department (see Appendix), each in an amount equal to one hundred percent (100%) of the amount of the contract price unless otherwise stated in the solicitation of bids. Acceptable performance and payment bonds shall be limited to the following:

3.7.1.2 Surety bonds underwritten by a company licensed to issue bonds in this State; or

3.7.1.3 A certificate of deposit; credit union share certificate; or cashier's, treasurer's, teller's or official check drawn by, or a certified check accepted by, and payable on demand to the State by a bank, a savings institution, or credit union insured by the Federal Deposit

Insurance Corporation or the National Credit Union Administration.

(a) These instruments may be utilized only a maximum of $100,000.

(b) If the required security or bond amount totals over $100,000, more than one instrument not exceeding $100,000 each and issued by different financial institutions shall be acceptable.

3.7.2 If the Contractor fails to deliver the required performance and payment bonds, the contractor's award shall be canceled, the Department shall have the remedies provided under Section 3.9 FAILURE TO EXECUTE THE CONTRACT and award of the contract shall be made to the next lowest responsible and responsive bidder.

3.8 CAMPAIGN CONTRIBUTIONS BY STATE AND COUNTY CONTRACTORS

Contractors are hereby notified of the applicability of Section 11-205.5, HRS, which states that campaign contributions are prohibited from specified State or County government contractors during the term of the contract if the contractors are paid with funds appropriated by a legislative body.

3.9 EXECUTION OF THE CONTRACT

3.9.1 Upon acceptance of the successful bidder's offer by the Contracting Officer, the Contractor shall provide satisfactory performance and payments bonds within ten (10) calendar days after the award of the contract or within such further time as granted by the Contracting Officer. No proposal or contract shall be considered binding upon the State until the contract has been fully and properly executed by all parties thereto and the Comptroller has endorsed thereon its certificate, as required by Section 103D-309, HRS, that there is an available unexpended appropriation or balance of an appropriation over and above all outstanding contracts sufficient to cover the State's amount required by such contract.

3.9.2 On any individual award totaling less than $25,000, the State reserves the right to execute the contract by the issuance of a State Purchase Order. Issuance of a State Purchase Order shall result in a binding contract between the parties without further action by the State. The issuance of a Purchase Order shall not be deemed a waiver of these General Conditions and Contract Document requirements.

3.10 FAILURE TO EXECUTE THE CONTRACT

3.10.1 Before the Award - If a low Bidder without legal justification withdraws its bid after the opening of bids but before the award of the contract, the State shall be entitled to retain as liquidated damages the amount established as bid security, and may take all appropriate actions to recover the performance liquidated damages sum from the property or third-party obligations deposited as bid security.

3.10.2 After the Award - If the Bidder to whom a contract is awarded shall fail or neglect to furnish security within ten (10) calendar days after such award or within such further time as the Contracting Officer may allow, the State shall be entitled to recover from such Bidder its actual damages, including but not limited to the difference between the bid and the next lowest responsive bid, as well as personnel and administrative costs, consulting and legal fees and other expenses incurred in arranging a contract with the next low responsive bidder or calling for new bids. The State may apply all or part of the amount of the bid security to reduce its damages. If upon determination by the State of the amount of its damages the bid security exceeds that amount, it shall release or return the excess to the person who provided same.

3.10.3 Engineer's Options - Upon a withdrawal of the lowest responsive bid, or upon a refusal or failure of the lowest Bidder to execute the contract, the Engineer may thereupon award the contract to the next lowest responsible and responsive Bidder or may call for new bids, whichever method the Engineer may deem to be in the best interests of the State.

3.11 NOTICE TO PROCEED

3.11.1 After the contract is fully executed and signed by the Department of Defense, the Contractor will be sent a formal Notice to Proceed letter advising the Contractor of the date on which it may proceed with the work. The Contractor shall be allowed ten (10) consecutive working days from said date to begin its work. In the event that the Contractor refuses or neglects to start the work, the Engineer may terminate the contract in accordance with Section 7.27 TERMINATION OF CONTRACT FOR CAUSE.

3.11.2 The Contractor may commence its operations strictly at its own risk prior to receipt of the formal notice to proceed, provided it makes a written request and has received approval from the Engineer in writing. All work performed shall be conducted in accordance with Section 7.1 PROSECUTION OF THE WORK.

3.11.3 In certain cases, the State, with agreement of the Contractor, may issue a Notice to Proceed before full execution of the contract by the Engineer and it may

further issue a Notice to Proceed concurrently with the Notice of Award.

3.11.4 In the event the Notice to Proceed is not issued within one hundred and eighty (180) days after the date of the award of contract the Contractor may submit a claim for increased labor and material costs (but not overhead costs) which are directly attributable to the delay beyond the first 180 days. Such claims shall be accompanied with the necessary documentation to justify the claim. No payment will be made for escalation costs that are not fully justified.

GENERAL CONDITIONS
ARTICLE 4 - Scope of Work

4.1 INTENT OF CONTRACT, DUTY OF CONTRACTOR - The intent of the Contract is to provide for the construction, complete in every detail, of the Work described at the accepted bid price and within the time established by the contract. The Contractor has the duty to furnish all labor, materials, equipment, tools, transportation, incidentals and supplies and to determine the means, methods and schedules required to complete the work in accordance with the drawings, specifications and terms of the contract.

4.2 CHANGES - The Engineer may at any time, during the progress of the work, by written order, and without notice to the sureties, make changes in the work as may be found to be necessary or desirable. Such changes shall not invalidate the Contract nor release the Surety, and the Contractor will perform the work as changed, as though it had been a part of the original Contract.

4.2.1 Minor Changes - Minor changes in the work may be directed by the Engineer with no change in contract price or time of performance. Minor changes are consistent with the intent of the Contract Documents and do not substantially alter the type of work to be performed or involve any adjustment to the contract sum or extension of the contract time.

4.2.2 Oral Orders

4.2.2.1 Any oral order, direction, instruction, interpretation or determination from the Engineer or any other person which in the opinion of the Contractor causes any change, shall be considered as a change only if the Contractor gives the Engineer written notice of its intent to treat such oral order, direction, instruction, interpretation or determination as a change directive. Such written notice must be delivered to the Engineer before the Contractor acts in conformity with the oral order, direction, instruction, interpretation or determination, but not more than five (5) days after delivery of the oral order to the Contractor. The written notice shall state the date, circumstances, whether a time extension will be requested, and source of the order that the Contractor regards as a change. Such written notice may not be waived and shall be a condition precedent to the filing of any claim by the Contractor. Unless the Contractor acts in accordance with this procedure, any such oral order shall not be treated as a change for which the Contractor may make a claim for an increase in the contract time or contract price related to such work.

4.2.2.2 No more than five (5) days after receipt of the written notice from the Contractor, a Field Order shall be issued for the subject work if the State agrees that it constitutes a change. If no Field Order is issued in the time established, it shall be deemed a rejection of Contractor's claim for a change. If the Contractor objects to the failure to issue a Field Order, it shall file a written protest with the Engineer within thirty (30) days after delivery to the Engineer of the Contractor's written notice of its intention to treat the oral order as a change. In all cases, the Contractor shall proceed with the work. The protest shall be determined as provided in Section 7.25 DISPUTES AND CLAIMS.

4.2.3 Field Orders – Upon receipt of a Field Order, the Contractor shall proceed with the changes as ordered. If the Contractor does not agree with any of the terms or conditions or in the adjustment or non-adjustment to the contract time and / or contract price, Contractor shall file a notice of intent to claim within thirty (30) calendar days after receipt of the written Field Order that was not agreed upon by both parties. Failure to file such protest within the time specified shall constitute agreement on the part of the Contractor with the terms, conditions, amounts and adjustment or non-adjustment to contract price and / or contract time set forth in the Field Order. The requirement for timely written notice shall be a condition precedent to the assertion of a claim.

4.2.4 Change Orders

4.2.4.1 The Department will issue sequentially numbered Change Orders at times it deems appropriate during the contract period. A Change Order may contain the adjustment in contract price and / or time for a number of Field Orders. The Change Order will be issued in the format attached (refer to the Appendix). No payment for any change will be made until the change order is issued.

4.2.4.2 The penal sum of the Surety Performance and Payment Bonds will be adjusted by the amount of each and every Change Order.

4.2.4.3 Upon receipt of a change order, that the Contractor does not agree with any of the terms or conditions or the adjustments or non adjustments of the

contract price or contract time; the Contractor shall not execute or sign the change order, but shall return the unsigned change order, along with a written notification of the conditions or items that are in dispute.

4.2.4.4 If the Contractor signs or executes the change order, this constitutes an agreement on the part of the Contractor with the terms and conditions of the change order. A change order that is mutually agreed to and signed by the parties of the contract constitutes a contract modification.

4.2.5 Claim Notification – The Contractor shall file a notice of intent to claim for a disputed change order within 30 calendar days after receipt of the written order. Failure to file the protest within the time specified constitutes an agreement on the part of the Contractor within the terms, conditions, amounts and adjustment or non-adjustment to contract price or contract time set forth in the dispute change order. The requirement for timely written notice shall be a condition precedent to the assertion of a claim.

4.2.6 Proceeding with Directed Work – Upon receipt of a contract modification, change order, or field order, the Contractor shall proceed with the directed changes and instructions. The Contractor's right to make a claim for additional compensation or an extension of time for completion is not affected by proceeding with the changes and instructions described in a change order and field order.

4.2.7 Pricing or Negotiating Costs Not Allowed – The Contractor's cost of responding to requests for price or time adjustments is included in the contract price. No additional compensation will be allowed unless authorized by the Contracting Officer.

4.3 DUTY OF CONTRACTOR TO PROVIDE PROPOSAL FOR CHANGES

4.3.1 A Field Order may request the Contractor to supply the Department with a proposal for an adjustment to the contract time or contract price for the work described therein. Any such request for a proposal shall not affect the duty of the Contractor to proceed as ordered with the work described in the Field Order.

4.3.2 The Engineer from time to time may issue a Bulletin to the Contractor requesting price and / or time adjustment proposals for contemplated changes in the work. A Bulletin is not a directive for the Contractor to perform the work described therein.

4.3.3 Within fifteen (15) days after receipt of a Bulletin or Field Order containing a request for proposal, the Contractor shall submit to the Engineer a detailed written statement in a format similar to the one shown in the Appendix to these General Conditions setting forth all charges the Contractor proposes for the change and the proposed adjustment of the contract time, all properly itemized and supported by sufficient substantiating data to permit evaluation. No time extension will be granted for delays caused by late Contractor pricing of changes or proposed changes. If the project is delayed because Contractor failed to submit the cost proposal within the fifteen (15) days, or as allowed by the Engineer, performance liquidated damages will be assessed in accordance with Section 7.26 FAILURE TO COMPLETE THE WORK ON TIME.

4.3.4 No payment shall be allowed to the Contractor for pricing or negotiating proposed or actual changes.

4.4 PRICE ADJUSTMENT HRS 103D-501

4.4.1 A fully executed change order or other document permitting billing for the adjustment in price under any method listed in paragraphs (4.4.1.1) through (4.4.1.5) shall be issued within ten days after agreement on the price adjustment. Any adjustment in the contract price pursuant to a change or claim in this contract shall be made in one or more of the following ways:

4.4.1.1 By agreement on a fixed price adjustment before commencement of the pertinent performance;

4.4.1.2 By unit prices specified in the contract or subsequently agreed upon before commencement of the pertinent performance;

4.4.1.3 Whenever there is a variation in quantity for any work covered by any line item in the schedule of costs submitted as required by Section 7.2 COMMENCEMENT REQUIREMENTS, by the Department at its discretion, adjusting the lump sum price proportionately;

4.4.1.4 Force Account Method. At the sole option of the Contracting Officer, by the costs attributable to the event or situation covered by the change, plus appropriate profit or fee, all as specified in Section 4.5 ALLOWANCES FOR OVERHEAD AND PROFIT and the force account provision of Section 8.3 PAYMENT FOR ADDITIONAL WORK before commencement of the pertinent performance;

4.4.1.5 In such other manner as the parties may mutually agree upon before commencement of the pertinent performance; or

4.4.1.6 In the absence of an agreement between the two parties:

4.4.1.6.a For change orders with value not exceeding $50,000 by documented actual costs of the work, allowing for overhead and profit as set forth in Section 4.5 ALLOWANCES FOR OVERHEAD AND PROFIT. A change order shall be issued within fifteen days of submission by the contractor of proper documentation of completed force account work, whether periodic (conforming to the applicable billing cycle) or final. The procurement officer shall return any documentation that is defective to the contractor within fifteen days after receipt, with a statement identifying the defect; or

4.4.1.6.b For change orders with value exceeding $50,000 by a unilateral determination by the Contracting Officer of the reasonable and necessary costs attributable to the event or situation covered by the change, plus appropriate profit or fee, all as computed by the Contracting Officer in accordance with applicable sections of Chapters 3-123 and 3-126 of the Hawaii Administrative Rules, and Section 4.5 ALLOWANCES FOR OVERHEAD AND PROFIT. When a unilateral determination has been made, a unilateral change order shall be issued within ten days. Upon receipt of the unilateral change order, if the contractor does not agree with any of the terms or conditions, or the adjustment of non-adjustment of the contract time or contract price, the contractor shall file a notice if intent to claim within thirty days after the receipt of the written unilateral change order. Failure to file a protest within the time specified shall constitute agreement on the part of the contractor with the terms, conditions, amounts, and adjustment or non-adjustment of the contract time or the contract price set forth in the unilateral change order.

4.4.1.7 In such other manner as the parties may mutually agree;

4.4.1.8 At the sole option of the Engineer, by the costs attributable to the event or situation covered by the change, plus appropriate profit or fee, all as specified in Section 4.5 ALLOWANCES FOR OVERHEAD AND PROFIT and the force account provision of Section 8.3 PAYMENT FOR ADDITIONAL WORK; or

4.4.1.9 In the absence of an agreement between the two parties, by a unilateral determination by the Engineer of the reasonable and necessary costs attributable to the event or situation covered by the change, plus appropriate profit or fee, all as computed by the Engineer in accordance with applicable sections of Chapters 3-123 and 3-126 of the Hawaii Administrative Rules and Regulations, and Section 4.5 ALLOWANCES FOR OVERHEAD AND PROFIT.

4.4.2 Cost or Pricing Data – Contractor shall provide and certify cost or pricing data for any price adjustment to a contract involving aggregate increases and decreases in costs plus applicable profits expected to exceed $100,000. The certified cost or pricing data shall be subject to the provisions of HAR chapter 3-122, subchapter 15.

4.5 ALLOWANCES FOR OVERHEAD AND PROFIT HRS103D-501

4.5.1 In determining the cost or credit to the Department resulting from a change, the allowances for all overhead, including, extended overhead resulting from adjustments to contract time (including home office, branch office and field overhead, and related delay impact costs) and profit combined, shall not exceed the percentages set forth below:

4.5.1.1 For the Contractor, for any work performed by its own labor forces, twenty percent (20%) of the direct cost;

4.5.1.2 For each subcontractor involved, for any work performed by its own forces, twenty percent (20%) of the direct cost;

4.5.1.3 For the Contractor or any subcontractor, for work performed by their subcontractors, ten percent (10%) of the amount due the performing subcontractor.

4.5.2 Not more than three markup allowance line item additions not exceeding the maximum percentage shown above will be allowed for profit and overhead, regardless of the number of tier subcontractors.

4.5.3 The allowance percentages will be applied to all credits and to the net increase of direct costs where work is added and deleted by the changes.

4.6 PAYMENT FOR DELETED MATERIAL

4.6.1 Cancelled Orders - If acceptable material was ordered by the Contractor for any item deleted by an ordered change in the work prior to the date of notification of such deletion by the Engineer, the Contractor shall use its best efforts to cancel the order. The Department shall pay reasonable cancellation charges required by the supplier excluding any markup for overhead and profit to the Contractor.

4.6.2 Returned Materials - If acceptable deleted material is in the possession of the Contractor or is ultimately received by the Contractor, if such material is returnable to the supplier and the Engineer so directs, the material shall be returned and the Contractor will be paid for the reasonable charges made by the supplier for the return of the material, excluding any markup for overhead and profit to the Contractor. The cost to the

Contractor for handling the returned material will be paid for as provided in Section 4.4 PRICE ADJUSTMENT.

4.6.3 Uncancelled Materials - If orders for acceptable deleted material cannot be canceled at a reasonable cost, it will be paid for at the actual cost to the Contractor including an appropriate markup for overhead and profit as set forth in Section 4.5 ALLOWANCES FOR OVERHEAD AND PROFIT. In such case, the material paid for shall become the property of the State and the cost of further storage and handling shall be paid for as provided in Section 4.4 PRICE ADJUSTMENT.

4.7 VARIATIONS IN ESTIMATED QUANTITIES §3-125-10 HAR

4.7.1 Where the quantity of a major unit price item in this contract is estimated on the proposal form and where the actual quantity of such pay item varies more than fifteen percent (15%) above or below the estimated quantity stated in this contract, an adjustment in the contract price shall be made upon demand of either party. The adjustment shall be based upon any increase or decrease in costs due solely to the variation above one hundred fifteen percent (115%) or below eighty-five percent (85%) of the estimated quantity. The adjustment shall be subject to Section 4.4 PRICE ADJUSTMENT and Section 4.5 ALLOWANCES FOR OVERHEAD AND PROFIT. If the quantity variation is such as to cause an increase in the time necessary for completion, the Engineer shall, upon receipt of a written request for an extension of time within thirty (30) days of the item's completion, ascertain the facts and make such adjustment to the completion date as the Engineer finds justified.

4.8 VARIATIONS IN BOTTOM ELEVATIONS The Contractor shall plan and construct to the bottom elevations of footings, piles, drilled shafts, or cofferdams as shown on the drawings. When the bottom of a pile, drilled shaft, or cofferdam is shown as an estimated or approximate elevation, the Contractor shall plan and construct to that elevation or to any deeper elevation required by the drawings or direction of the Engineer. In the event the bottom elevation is lowered, the Contractor shall be entitled to additional payment in accordance with Sections 4.4 PRICE ADJUSTMENT and 4.5 ALLOWANCES FOR OVERHEAD AND PROFIT. In the event the bottom elevation is raised, the State shall be entitled to a credit in accordance with Sections 4.2 CHANGES, 4.4 PRICE ADJUSTMENT and 4.5 ALLOWANCES FOR OVERHEAD AND PROFIT.

4.9 DIFFERING SITE CONDITIONS §3-125-11 HAR

4.9.1 During the progress of the work, if the Contractor encounters conditions at the site differing materially from those shown in the drawings and specifications, Contractor shall promptly, and before any such conditions are disturbed or damaged (except in an emergency as required by subsection 7.17.8), notify the Engineer in writing of:

4.9.1.1 Subsurface or latent physical conditions at the site differing materially from those indicated in the contract; or

4.9.1.2 Unknown physical conditions at the site, of an unusual nature differing materially from those ordinarily encountered and generally recognized as inherent in work of the character provided for in this contract.

4.9.2 After receipt of written notice, the Engineer shall promptly investigate the site, and if it is found that such conditions do materially differ and cause an increase in the Contractor's cost of, or the time required to, perform any part of the Work, whether or not changed as a result of such conditions, an adjustment shall be made and the contract modified accordingly. Any adjustment in contract price made pursuant to this Section 4.9 shall be determined in accordance with Sections 4.4 PRICE ADJUSTMENT and 7.25 DISPUTES AND CLAIMS.

4.9.3 Nothing contained in this Section 4.9 shall be grounds for an adjustment in compensation if the Contractor had actual knowledge or should have known of the existence of such conditions prior to the submission of bids.

4.10 UTILITIES AND SERVICES

4.10.1 The cost of all the following will be included in the contract price and the Contractor shall be fully responsible for:

4.10.1.1 Reviewing and checking all such information and data,

4.10.1.2 Locating all underground and overhead utilities shown or indicated in the contract documents,

4.10.1.3 Coordination of the Work with the Owners of such underground and overhead utilities during construction, and

4.10.1.4 The safety and protection of all such underground and overhead utilities as provided in Section7.17 PROTECTION OF PERSONS AND PROPERTY and repairing any damage thereto resulting from the work.

4.10.2 Unknown Utilities - During the progress of the work, if an underground utility is uncovered or revealed at or contiguous to the site which was not shown or indicated in the Contract Documents, or found at a location that is substantially different than shown or indicated in the Contract Documents, Contractor shall promptly, and before any such conditions are disturbed or damaged (except in an emergency as required by subsection 7.17.8), notify the Engineer. Contractor shall be responsible for the safety and protection of the underground utility as provided in Section7.17 PROTECTION OF PERSONS AND PROPERTY. Refer to subsections 4.9.2 and 4.9.3.

4.10.3 If the Engineer determines a change in the Contract Documents is required, a Field Order or Change Order will be issued. Upon issuance of a duly authorized Field Order or Change Order regarding the disposition of a newly discovered utility, Contractor shall be responsible for damages to the utility, including any damage claims due to the disruption of service caused by the utility being damaged.

4.10.4 Restoration of Damaged Utilities - The Contractor shall repair and restore to pre-damaged condition any utilities or any other property it damaged. The Contractor shall be liable for any resulting damages, to the Work or to the utility owner or property owner and shall pay any claim due to the disruption of service caused by the utilities being damaged. Contractor shall defend and save harmless the State from all suits, actions or claims of any character brought on account of such damages, whether or not the State may have been partially at fault. Contractor shall obtain public liability and property damage insurance pursuant to Article 7 PROSECUTION AND PROGRESS to cover such risk of damage.

4.10.5 In the event the Contractor, simultaneously with the discovery of an unknown utility or other property, damages that utility or other property, the Contractor shall immediately notify the Engineer. If the Contractor is without fault in such a situation, notwithstanding subsection 4.10.4, the Contractor shall not be liable for resulting damages or the defense of the State from claims brought on account of said damages to unknown utilities or other property. Upon instruction from the Engineer, the Contractor shall repair all damages and execute a plan for dealing with the damaged utility or other property. This repair work shall be considered additional work as covered in Section 4.2 CHANGES.

ARTICLE 5 - Control of Work

5.1 AUTHORITY OF THE ENGINEER

5.1.1 The Engineer shall make final and conclusive decisions on all questions which may arise relating to the quality and acceptability of the materials furnished and work performed, the manner of performance and rate of progress of the work, the interpretation of the Contract Documents, the acceptable fulfillment of the contract on the part of the Contractor, the compensation under the Contract and the mutual rights of the parties to the Contract.

5.1.2 The Engineer shall have the authority to enforce and make effective such decisions and orders at the Contractor's expense when the Contractor fails to carry such decisions and orders out promptly and diligently.

5.1.3 The Engineer shall have the authority to suspend the work wholly or in part as provided in Section 7.24 SUSPENSION OF WORK.

5.1.4 The Engineer may delegate specific authority to act for the Engineer to a specific person or persons. Such delegation of authority shall be established in writing to the Contractor.

5.2 AUTHORITY OF THE INSPECTOR

5.2.1 The Inspector shall observe and inspect the contract performance and materials. The Inspector does not have any authority vested in the Engineer unless specifically delegated in writing.

5.2.2 The Inspector may offer advice and recommendations to the Contractor, but any such advice or recommendations are not directives from the Engineer.

5.2.3 The Inspector has no authority to allow deviations from the Contract Documents and may reject any and all work that the Inspector deems is not in conformity with the contract requirements. Failure of an Inspector at any time to reject non-conforming work shall not be considered a waiver of the Department's right to require work in strict conformity with the Contract Documents as a condition of final acceptance.

5.3 AUTHORITY OF CONSULTANT(S) - The Department may engage Consultant(s) for limited or full observation to supplement the inspections performed by the State and respective Counties. Unless otherwise specified in writing to the Contractor, such retained Consultant(s) will have the authority of a Project Inspector.

5.4 SHOP DRAWINGS AND OTHER SUBMITTALS

5.4.1 The following documents shall be submitted where required by the contract documents:

5.4.1.1 Shop Drawings

(1) The Contractor shall prepare, and thoroughly check, approve, all shop drawings, including those prepared by subcontractors or any other persons. The Contractor shall indicate its approval by stamping and signing each drawing. Any shop drawing submitted without being reviewed, stamped and signed will be considered as not having been submitted, and any delay caused thereby shall be the Contractor's responsibility.

(2) Shop drawings shall indicate in detail all parts of an item of work, including erection and setting instructions and engagements with work of other trades or other separate contractors. Shop drawings for structural steel, millwork and pre-cast concrete shall consist of calculations, fabrication details, erection drawings and other working drawings, as necessary, to show the details, dimensions, sizes of members, anchor bolt plans, insert locations and other information necessary for the complete fabrication and erection of the structure to be constructed.

(3) All shop drawings as required by the contract, or as determined by the Engineer to be necessary to illustrate details of the Work shall be submitted to the Engineer with such promptness as to cause no delay in the work or in that of any other Contractor. Delay caused by the failure of the Contractor to submit shop drawings on a timely basis to allow for review, possible resubmittal and acceptance will not be considered as a justifiable reason for a contract time extension. Contractor, at its own risk, may proceed with the work affected by the shop drawings before receiving acceptance; however the Department shall not be liable for any costs or time required for the correction of work done without the benefit of accepted shop drawings.

(4) It is the Contractor's obligation and responsibility to check all of its and its subcontractor's shop drawings and be fully responsible for them and for coordination with connecting and other related work. The Contractor shall prepare, and submit to the Engineer coordination drawings showing the installation locations of all plumbing, piping, duct and electrical work including equipment throughout the project. By approving and submitting shop drawings, the Contractor thereby represents that it has determined and verified all field measurements and field construction criteria, or will do so, and that it has checked and coordinated each shop drawing with the requirements of the work and the contract documents. When shop drawings are prepared and processed before field measurements and field construction criteria can be or have been determined or verified, the Contractor shall make all necessary adjustments in the work or resubmit further shop drawings, all at no change in contract price or time.

5.4.1.2 Shop Drawing Form - Each drawing and/or series of drawings submitted must be accompanied by a letter of transmittal giving a list of the titles and number of the drawings. Each series shall be numbered consecutively for ready reference and each drawing shall be marked with the following information:

(1) Date of Submission
(2) Name of Project
(3) Project Number
(4) Location of Project
(5) Name of submitting Contractor and Subcontractor
(6) Revision Number

5.4.1.3 The size of the sheets that shop drawings are prepared on shall be as appropriate to suit the drawing being presented so that the information is clearly and legibly depicted. At the determination of the Engineer, for each sheet of drawings, the submittal shall consist of either; one reproducible transparency and five prints, or eight prints.

5.4.1.4 Descriptive Sheets and Other Submittals - When a submittal is required by the contract, the Contractor shall submit to the Engineer eight (8) complete sets of descriptive sheets such as shop drawings, brochures, catalogs, illustrations, calculation, material safety data sheets (MSDS), certificates, reports, warranty, etc., which will completely describe the material, product, equipment, furniture or appliances to be used in the project as shown in the drawings and specifications and how it will be integrated into adjoining construction. When submittals are specified to be submitted under Web Based Construction Management System, the number of complete sets will be as specified or as directed by the Engineer. Prior to the submittal, the Contractor shall review and check all submittal sheets for conformity to the contract requirements and indicate such conformity by marking or stamping and signing each sheet. Where descriptive sheets include materials, systems, options, accessories, etc. that do not apply to this contract, non-relevant items shall be crossed out so that all remaining information will be considered applicable to this contract. It is the responsibility of the Contractor to submit descriptive sheets for review and acceptance by the Engineer as required at the earliest possible date after the date of award in order to meet the construction schedule. Delays caused by the failure of the Contractor to submit descriptive sheets as required will not be considered as justifiable reasons for contract time extension.

5.4.1.5 Material Samples and Color Samples – When material and color sample submittals are required by the contract, the Contractor shall submit to the Engineer no less than three (3) samples conforming to Section 6.6 MATERIAL SAMPLES. One sample will be retained by the Consultant, one sample will be retained by the State, and the remaining sample(s) will be returned to the contractor. Prior to the material and color submittal, the Contractor shall review and check all samples for conformity to the contract requirements and indicate such conformity by marking or stamping and signing each sample. It is the responsibility of the Contractor to submit samples for review and acceptance by the Engineer as required at the earliest possible date after the date of award in order to meet the construction schedule. Delays caused by the failure of the Contractor to submit material and color samples as required will not be considered as justifiable reasons for contract time extension.

5.4.1.6 Unless the technical sections (Divisions 2 – 16) specifically require the Contractor furnish a greater quantity of shop drawings and other submittals, the Contractor shall furnish the quantities required by this section.

5.4.2 Submittal Variances - The Contractor shall include with the submittal, written notification clearly identifying all deviations or variances from the contract drawings, specifications and other Contract Documents. The notice shall be in a written form separate from the submittal. The variances shall also be clearly indicated on the shop drawing, descriptive sheet, material sample or color sample. Failure to so notify of and identify such variances shall be grounds for the subsequent rejection of the related work or materials, notwithstanding that the submittal was accepted by the Engineer. If the variances are not acceptable to the Engineer, the Contractor will be required to furnish the item as specified or indicated on the contract documents at no additional cost or time.

5.4.3 Review and Acceptance Process - Submittals will be returned to the Contractor within twenty one (21) days (for projects on Oahu) and twenty five (25) days (for projects on the islands of Hawaii, Maui, Kauai, Molokai and Lanai) after receipt by the Engineer unless otherwise agreed between the Contractor and the Engineer or as stated elsewhere in the contract documents.

5.4.3.1 The acceptance by the Engineer of the Contractor's submittal relates only to their sufficiency and compliance with the intention of the contract. Acceptance by the Engineer of the Contractor's submittal does not relieve the Contractor of any responsibility for accuracy of dimensions, details, and proper fit, and for agreement and conformity of submittal with the contract drawings and specifications. Nor will the Engineer's acceptance relieve the Contractor of responsibility for variance from the contract documents unless the Contractor, at the time of submittal, has provided notice and identification of such variances required by this section. Acceptance of a variance shall not justify a contract price or time adjustment unless the Contractor requests such an
adjustment at the time of submittal and the adjustment are explicitly agreed to in writing by the Engineer. Any such request shall include price details and proposed scheduling modifications. Acceptance of a variance is subject to all contract terms, stipulations and covenants, and is without prejudice to any and all rights under the surety bond.

5.4.3.2 If the Engineer returns a submittal to the Contractor that has been rejected, the Contractor, so as not to delay the work, shall promptly make a resubmittal conforming to the requirements of the contract documents and indicating in writing on the transmittal and the subject submittal what portions of the resubmittal has been altered in order to meet the acceptance of the Engineer. Any other differences between the resubmittal and the prior submittal shall also be specifically described in the transmittal.

5.4.3.3 No mark or notation made by the Engineer on or accompanying the return of any submittal to the Contractor shall be considered a request or order for a change in work. If the Contractor believes any such mark or notation constitutes a request for a change in the work for which it is entitled to an adjustment in contract price and/or time, the Contractor must follow the same procedures established in Section 4.2 CHANGES for oral orders, directions, instructions, interpretations or determinations from the Engineer or else lose its right to claim for an adjustment.

5.5 COORDINATION OF CONTRACT DOCUMENTS - It is the intent of the Contract Documents to describe a functionally complete Project (or part thereof) to be constructed in accordance with the Contract Documents. The Contract Documents are complementary: any requirement occurring in one document is as binding as though occurring in all. In the event of conflict or discrepancy the priorities stated in the following subparagraphs shall govern:

5.5.1 Addenda shall govern over all other Contract Documents. Subsequent addenda issued shall govern over prior addenda only to the extent specified.

5.5.2 SPECIAL CONDITIONS and Proposal shall govern over the GENERAL CONDITIONS and Specifications.

5.5.3 Specifications shall govern over drawings.

5.5.4 Specification Error - Should an error or conflict appear within the specification, the Contractor shall immediately notify the Engineer. The Engineer shall promptly issue instructions as to procedure. Any requirement occurring in one or more parts of the specification is as binding as though occurring in all applicable parts.

5.5.4.1 Should an error or conflict appear within a specification section, between a listed manufacturer / product and the performance requirements of the specification section, the performance requirements shall govern.

5.5.5 Drawings:

5.5.5.1 Schedules shall govern over all other notes and drawings.

5.5.5.2 Bottom elevations of footings shown on drawings shall govern over a general note such as: "All footings shall rest on firm, undisturbed soil and extend a minimum of a certain number of feet into natural or finish grade, whichever is lower."

5.5.5.3 Except for drawing schedules and bottom elevations as noted above, general notes shall govern over all other portions of the drawings:

5.5.5.4 Larger scale drawings shall govern over smaller scale drawings.

5.5.5.5 Figured or numerical dimensions shall govern over dimensions obtained by scaling. Measurements from the drawings when scaled shall be subject to the approval of the Engineer.

5.5.5.6 In cases of discrepancies in the figures or drawings, the discrepancies shall be immediately referred to the Engineer without whose decision said discrepancy shall not be corrected by the Contractor save at its own risk and in the settlement of any complications arising from such adjustment without the knowledge and consent of the Engineer, the Contractor shall bear all extra expense involved.

5.5.5.7 Items shown on the drawings that are completely void in terms of description, details, quality and / or performance standards in both the drawings and specifications to make a price determination shall be considered an omission and the Contractor shall immediately refer same to the Engineer for a decision.

5.5.5.8 Where there is a conflict between the architectural sheets and the civil or landscaping or electrical sheets, etc., the conflict shall be considered a discrepancy and the Contractor shall immediately refer same to the Engineer for a decision.

5.5.5.9 Any requirement occurring in one or more of the sheets is as binding as though occurring in all applicable sheets.

5.6 INTERPRETATION OF DRAWINGS AND SPECIFICATIONS - The Contractor shall carefully study and compare the Contract Documents with each other, with field conditions and with the information furnished by the State and shall at once report to the Engineer errors, conflicts, ambiguities, inconsistencies or omissions discovered. Should an item not be sufficiently detailed or explained in the Contract Documents, Contractor shall report and request the Engineer' clarification and interpretation. The Engineer will issue a clarification or interpretation that is consistent with the intent of and reasonably inferred from Contract Documents.

5.7 EXAMINATION OF DRAWINGS, SPECIFICATIONS, PROJECT SITE

5.7.1 The Contractor shall examine carefully the Project Site to become familiar with the conditions to be encountered in performing the Work and the requirements of the Contact Documents.

5.7.1.1 No extra compensation will be given by reason of the Contractor's misunderstanding or lack of knowledge of the requirements of the Work to be accomplished or the conditions to be encountered in performing the project.

5.7.1.2 No extra compensation will be given by reason of the Contractor's misunderstanding or lack of knowledge when the existence of differing site, subsurface or physical conditions could have been reasonably discovered or revealed as a result of any examination, investigation, exploration, test or study of the site and contiguous areas required by the Bidding requirements or Contract Documents to be conducted by or for the Contractor.

5.7.2 When the Contract Drawings include a log of test borings showing a record of the data obtained by the Department's investigation of subsurface conditions, said log represents only the opinion of the Department as to the character of material encountered in its test borings and at only the location of each boring. The Contractor acknowledges that underground site conditions in Hawaii vary widely. There is no warranty, either expressed or implied, that the conditions indicated are representative of those existing throughout the work or any part of it, or that other conditions may not occur.

5.7.3 Reference is made to the SPECIAL CONDITIONS for identification of subsurface investigations, reports, explorations and tests utilized by the State in preparation the Contract Documents. Such reports, drawings, boring logs etc. are not part of the Contract Documents.

5.8 COOPERATION BETWEEN THE CONTRACTOR AND THE DEPARTMENT

5.8.1 Furnishing Drawings and Specifications - Contractor to supply copies of the Contract Drawings and Specifications. Contractor shall have and maintain at least one copy of the Contract Drawings and Specifications on the work site, at all times. Contractor shall cooperate with the Engineer, the Inspector(s), and other contractors in every possible way.

5.8.2 Superintendent - The Contractor shall have a competent superintendent or agent on the work site while work is being performed under the contract. The superintendent or agent shall be experienced in the type of project being undertaken and the work being performed. The superintendent or agent shall represent the Contractor and shall have the authority to act on behalf of the Contractor. Communications given to the superintendent or agent shall be as binding as if given to the Contractor.

5.8.2.1 If the superintendent or agent is not present at the work site, the Engineer shall have the right to suspend the work as described under Section 7.24 SUSPENSION OF WORK.

5.8.2.2 The Contractor shall file with the Engineer a written statement giving the name of the superintendent or agent assigned to the project. The Contractor shall be responsible for notifying the Engineer in writing of any change in the superintendent or agent.

5.8.2.3 The requirements of this subsection 5.8.2 may be waived by the Engineer.

5.8.3 Engineering Work - The Contractor shall properly and accurately lay out the work, perform all engineering work, and furnish all engineering materials and equipment required to establish and maintain all lines, grades, dimensions and elevations called for in the drawings or required in the progress of construction, unless otherwise noted in the contract documents. The Contractor will be held definitely and absolutely responsible for any errors in lines, grades, dimensions and elevations and shall at once, on instruction from the Engineer, correct and make good such errors or any errors, or faults in the work resulting from errors in engineering performed under the requirements of its contract to the entire satisfaction of the Engineer. Full compensation for the work shall be included in the prices paid for contract items of work. No additional allowance will be made for the correction of incorrect engineering work.

5.8.3.1 The Engineer shall furnish the requisite bench elevations.

5.8.3.2 The Contractor shall locate and verify all lines, grades, dimensions and elevations indicated on the drawings before any excavation, or construction begins. Any discrepancy shall be immediately brought to the attention of the Engineer, any change shall be made in accordance with the Engineer's instruction.

5.8.3.3 The Contractor shall verify all street survey monuments (horizontal and vertical alignment) prior to final acceptance by the Engineer in accordance with any governmental requirements.

5.8.3.4 The Contractor shall provide a surveyor or Civil Engineer licensed in the State of Hawaii to verify and establish all lines, grades, dimensions and elevations.

5.8.4 Use of Structure or Improvement - The Department shall have the right, at any time during construction of the structure or improvements, to enter same for the purpose of installing by government labor or by any other Contractor or utility any necessary work in connection with the installation of facilities, it being mutually understood and agreed, however, that the Contractors, utilities and the Department will, so far as possible work to the mutual advantage of all, where their several works in the above mentioned or in unforeseen instances touch upon or interfere with each other.

As a convenience to those involved, the Engineer shall allocate the work and designate the sequence of construction in case of controversy between Contractors on separate projects under State jurisdiction.

5.8.4.1 The Department shall also have the right to use the structure, equipment, improvement or any part thereof, at any time after it is considered by the Engineer as available. In the event that the structure, equipment or any part thereof is so used, the Department shall be responsible for all expenses incidental to such use and any damages resulting from the Department's use.

5.8.4.2 Equipment warranty will commence to run before the work is complete when and if the Department begins actual use of the equipment for the purpose for which the equipment was designed and installed.

5.8.4.3 If the Department enters the structure for construction and / or occupancy and the Contractor is delayed because of interference by the Department or by extra work resulting from damage which the Contractor is not responsible for, or by extraordinary measures the Contractor must take to accommodate the Department, the Contractor shall be granted an extension of time in accordance with Section 7.21 CONTRACT TIME. However, if such use increases the cost or delays the completion of the remaining portions of work, the Contractor shall be entitled to such extra compensation or extension of time or both, as the State may determine to be proper. Any additional work necessary will be paid in accordance with Section 8.3 PAYMENT FOR ADDITIONAL WORK.

5.9 INSPECTION - The Engineer, the Department's consultants, Inspectors employed by the Department and other representatives duly authorized by the Department shall at all times have access to the work during its construction and shall be furnished with every reasonable facility for ascertaining at any time that the materials and the workmanship are in accordance with the requirements and intentions of the contract. All work done and all materials furnished shall be subject to inspection and acceptance.

5.9.1 Such inspection and approval may extend to all or part of the work, and to the preparation, fabrication or manufacture of the materials to be used. By entering into a contract for the supply of materials, equipment or performance of labor in connection with the Work, such Material and Equipment Supplier or Labor Contractor consents to and is subject to the terms of this Section 5.9 to the same extent as the Contractor.

5.9.2 Authority to Suspend Operations - The Inspector shall have the authority to suspend operations of any work being improperly performed by issuing a written order giving the reason for shutting down the work. Should the Contractor disregard such written order, the work done thereafter will not be accepted nor paid for.

5.9.3 The inspection of the work shall not relieve the Contractor of any of its obligations to fulfill the contract as prescribed. Notwithstanding prior payment and acceptance by the Engineer, defective and nonconforming work shall be corrected to comply with the contract requirements. Unsuitable, unspecified or unapproved materials may be rejected.

5.9.4 Federal Agency Inspection - Projects financed in whole or in part with Federal funds shall be subject to inspection and corrective requirements at all times by the Federal Agency involved at no cost to the State.

5.10 REMOVAL OF DEFECTIVE, NON-CONFORMING AND UNAUTHORIZED WORK

5.10.1 All work which has been rejected as not conforming to the requirements of the Contract shall be remedied or removed and replaced by the Contractor in an acceptable manner and no compensation will be allowed for such removal or replacement. Any work done beyond the work limits shown on the drawings and specifications or established by the Engineer or any additional work done without written authority will be considered as unauthorized and will not be paid for. Work so done may be ordered removed at the Contractor expense.

5.10.2 Scheduling Corrective Work - The Contractor shall perform its corrective or remedial work at the convenience of the State and shall obtain the Engineer's approval of its schedule.

5.10.3 Failure to Correct Work -Upon failure on the part of the Contractor to comply promptly with any order of the Engineer made under the provisions of this Section 5.10, the Engineer shall have authority to cause defective work to be remedied or removed and replaced, and unauthorized work to be removed, at the Contractor's expense, and to deduct the costs from any monies due or to become due the Contractor.

5.11 VALUE ENGINEERING INCENTIVE
§3-132 HAR amended by Act 149 SLH 1999 - On projects with contract amounts in excess of $250,000, the following Value Engineering Incentive Clause shall apply to allow the Contractor to share in cost savings that ensue from cost reduction proposals it submits.

5.11.1 The Value Engineering Incentive Clause applies to all Value Engineering Change Proposals (cost reduction proposals, hereinafter referred to as (VECP) initiated and developed by the Contractor for changing the drawings, designs, specifications or other requirements of this contract. This clause does not, however apply to any VECP unless it is identified as such by the Contractor at the time of its submission to the Engineer.

5.11.2 Value Engineering Change Proposal - All VECP must:

5.11.2.1 Result in a savings to the State of at least four thousand dollars ($4,000) by providing less costly items than without impairing any essential functions and characteristics such as service life, reliability, economy of operation, ease of maintenance and all necessary features of the completed work.

5.11.2.2 Require, in order to be applied to this contract, a change order to this contract.

5.11.2.3 Not adversely impact on the schedule of performance or the contract completion date.

5.11.3 VECP Required Information - The VECP will be processed expeditiously and in the same manner as prescribed for any other change order proposal. As a minimum, the following information will be submitted by the Contractor with each proposal:

5.11.3.1 A description of the difference between the existing contract requirements and the VECP, and the comparative advantages and disadvantages of each including durability, service life, reliability, economy of operation, ease of maintenance, design safety standards, desired appearance, impacts due to construction and other essential or desirable functions and characteristics as appropriate;

5.11.3.2 An itemization of the requirements of the contract which must be changed if the VECP is adopted and a recommendation as to how to make each such change;

5.11.3.3 An estimate of the reduction in performance costs that will result from adoption of the VECP taking into account the costs of implementation by the Contractor, including any amounts attributable to subcontracts, and the basis for the estimate;

5.11.3.4 A prediction of any effects the VECP would have on other costs to the State, such as State furnished property costs, costs of related items, and costs of maintenance and operation over the anticipated life of the material, equipment, or facilities as appropriate; the construction schedule, sequence and time; and bid item totals used for evaluation and payment purposes;

5.11.3.5 A statement of the time by which a change order adopting the VECP must be issued so as to obtain the maximum cost reduction during the remainder of this contract noting any effect on the contract time; and

5.11.3.6 The dates of any previous submissions of the VECP, the numbers of any Government contracts under which submitted and the previous actions by the Government, if known.

5.11.4 Required Use of Licensed Architect or Engineer - When, in the judgment of the Engineer, a VECP alters the design prepared by a registered professional architect or engineer, the Contractor shall ensure the changes to be prepared are by or under the supervision of a licensed professional architect or engineer, and stamped and so certified.

5.11.5 Unless and until a change order applies a VECP to a contract, the Contractor shall remain obligated to perform in accordance with the terms of the contract and the Department shall not be liable for delays incurred by the Contractor resulting from the time required for the Department's determination of the acceptability of the VECP.

5.11.5.1 The determination of the Engineer as to the acceptance of any VECP under a contract shall be final.

5.11.6 Acceptance of VECP - The Engineer may accept in whole or in part any VECP submitted pursuant to this section by issuing a change order to the contract. Prior to issuance of the change order, the Contractor shall submit complete final contract documents similar to those of the original contract showing the accepted changes and the new design and features as well as the following:

5.11.6.1 Design calculations;

5.11.6.2 The design criteria used; and

5.11.6.3 A detailed breakdown of costs and expenses to construct or implement such revisions.

5.11.6.4 The change order will identify the final VECP on which it is based.

5.11.7 VECP Price Adjustments - When a VECP is accepted under a contract, an adjustment in the contract price shall be made in accordance with Section 4.4 PRICE ADJUSTMENT. The adjustment shall first be established by determining the effect on the Contractor's cost of implementing the change, including any amount attributable to subcontractors and to the Department's charges to the Contractor for architectural, engineering, or other consultant services, and the staff time required to examine and review the proposal. The contract price shall then be reduced by fifty percent (50%) of the net estimated decrease in the cost of performance.

5.11.8 The Contractor may restrict the Department's right to use the data or information or both, on any sheet of a VECP or of the supporting data, submitted pursuant to this paragraph, if it is stated on that sheet as follows:

5.11.8.1 "This data or information or both shall not be disclosed outside the Department or be duplicated, used, or disclosed, in whole or in part, for any purpose other than to evaluate this VECP. This restriction shall not limit the Department's right to use this data or information or both if obtained from another source, or is otherwise available, without limitations. If this VECP is accepted by the Department by issuance of a change

order after the use of this data or information or both in such an evaluation, the Department shall have the right to duplicate, use and disclose any data or information or both pertinent to the proposal as accepted in any manner and for any purpose whatsoever and have others so do."

5.11.9 In the event of acceptance of a VECP, the Department shall have all rights to use, duplicate or disclose in whole or in part in any manner and for any purpose whatsoever, and to have or permit others to do so, any data or information or both reasonably necessary to fully utilize such proposal.

5.11.10 The Contractor shall submit with each VECP all required information and provide all additional information as may be required by the Engineer to evaluate and implement the VECP. The cost for preparing the VECP shall be the Contractor's responsibility, and any part of the Contractor's cost for implementing the change shall be due only when the proposal is accepted and a change order is issued.

5.11.11 If the services of the Department's architect, engineer or consultant is necessary to review and evaluate a VECP, the cost therefore shall be paid for by the Contractor.

5.11.12 Each VECP shall be evaluated as applicable to this contract, and past acceptance on another Department project for a similar item shall not be automatic grounds for approval.

5.11.13 The method by which the Contractor will share a portion of the cost savings from an accepted VECP shall be for this contract only, and no consideration shall be made for future acquisition, royalty type payment or collateral savings.

5.11.13.1 The Department may accept the proposed VECP in whole or in part. The Engineer shall issue a contract change order to identify and describe the accepted VECP.

5.12 SUBCONTRACTS - Nothing contained in the contract documents shall create a contractual relationship between the State and any subcontractor. The contractor may subcontract a portion of the work but the contractor shall remain responsible for the work that is subcontracted.

5.12.1 Replacing Subcontractors - Contractors may enter into subcontracts only with subcontractors listed in the offer form. The contractor will be allowed to replace a listed subcontractor if the subcontractor:

5.12.1.1 Fails, refuses or is unable to enter into a subcontract consistent with the terms and conditions of the subcontractor's offer presented to the contractor; or

5.12.1.2 Becomes insolvent; or

5.12.1.3 Has any license or certification necessary for performance of the work suspended or revoked; or

5.12.1.4 Has defaulted or has otherwise breached the subcontract in connection with the subcontracted work; or

5.12.1.5 Agrees to be substituted by providing a written release; or

5.12.1.6 Is unable or refuses to comply with other requirements of law applicable to contractors, subcontractors, and public works projects.

5.12.2 Notice of Replacing Subcontractor – The contractor shall provide a written notice to the Contracting Officer when it wishes to replace a subcontractor, including in the notice, the reasons for replacement. The contractor agrees to defend, hold harmless and indemnify the State against all claims, liabilities, or damages whatsoever, including attorneys fees arising out of or related to the replacement of a subcontractor. The contractor may not replace the subcontractor until the Contracting Officer approves of the replacement.

5.12.3 Adding Subcontractors – The Contractor may enter into a subcontract with a subcontractor that is not listed in the offer form only after this contract becomes enforceable and only after the Contracting Officer has approved the subcontractor.

5.12.4 Subcontracting - Contractor shall perform with its own organization, work amounting to not less than twenty (20%) of the total contract cost, exclusive of costs for materials and equipment the Contractor purchases for installation by its subcontractors, except that any items designated by the State in the contract as "specialty items" may be performed by a subcontract and the cost of any such specialty items so performed by the subcontract may be deducted from the total contract cost before computing the amount of work required to be performed by the Contractor with its own organization.

ARTICLE 6 - Control of Materials and Equipment

6.1 MATERIALS AND EQUIPMENT - Contractor shall furnish, pay for and install all material and equipment as called for in the drawings and specifications. Materials and equipment shall be new and the most suitable for the purpose intended unless

otherwise specified. The State does not guarantee that the specified or pre-qualified product listed in the drawings and specifications are available at the time of bid or during the contract period.

6.2 SOURCE OF SUPPLY AND QUALITY OF MATERIALS

6.2.1 Only materials conforming to the drawings and specifications and, when required by the contract have been accepted by the Engineer, shall be used. In order to expedite the inspection and testing of materials, at the request of the Engineer, the Contractor shall identify its proposed sources of materials within ten (10) days after notification by the Engineer.

6.2.2 At the option of the Engineer, the materials may be accepted by the Engineer at the source of supply before delivery is started. Representative preliminary samples of the character and quantity prescribed shall be submitted by the Contractor or producer for examination and tested in accordance with the methods referred to under samples and tests.

6.2.3 Engineer's Authorization to Test Materials - Materials proposed to be used may be inspected and tested whenever the Engineer deems necessary to determine conformance to the specified requirements. The cost of testing shall be borne by the Contractor. However, should test results show that the material(s) is in compliance with the specified requirements, the cost of the testing will be borne by the State.

6.2.4 Unacceptable Materials - In the event material(s) are found to be unacceptable, the Contractor shall cease their use, remove the unacceptable material(s) that have already been installed or applied, and furnish acceptable materials all at no additional cost to the State. No material which is in any way unfit for use shall be used.

6.3 SUBSTITUTION AFTER CONTRACT AWARD

6.3.1 Materials, equipment, articles and systems noted on the drawings and specifications, establish a standard of quality, function, performance or design requirements and shall not be interpreted to limit competition. Should trade names, makes, catalog numbers or brand names be specified, the contractor shall infer that these items indicate the quality, style, appearance or performance of the material, equipment, article, or systems to be used in the project. The contractor is responsible to use materials, equipment, articles or systems that meet the project requirements. Unless specifically provided otherwise in the contract documents, the contractor may, at its option, use any material equipment, article or system that, in the judgment of the Contracting officer, is equal to that required by the contract documents.

6.3.1.1 If after installing a material, equipment, article or system a variance is discovered, the contractor shall immediately replace the material, equipment, article or system with one that meets the requirements of the contract documents.

6.3.2 Substitution After Contract Award - Subject to the Contracting Officer's determination; material, equipment, article or system with a variant feature(s) may be allowed as a substitution, provided it is in the State's best interest. The State may deny a substitution; and if a substitution is denied, the contractor is not entitled to any additional compensation or time extension.

6.3.2.1 The contractor shall include with the submittal, a notification that identifies all deviations or variances from the contract documents. The notice shall be in a written form separate from the submittal. The variances shall be clearly shown on the shop drawing, descriptive sheet, and material sample or color sample; and the contractor shall certify that the substitution has no other variant features. Failures to identify the variances are grounds to reject the related work or materials, notwithstanding that the Contracting Officer accepted the submittal. If the variances are not acceptable to the Contracting Officer, the contractor will be required to furnish the item as specified on the contract documents at no additional cost or time.

6.3.2.2 Acceptance of a variance shall not justify a contract price or time adjustment unless the contractor requests an adjustment at the time of submittal and the adjustments are explicitly agreed to in writing by the Contracting Officer. Any request shall include price details and proposed scheduling modifications. Acceptance of a variance is subject to all contract terms, and is without prejudice to all rights under the surety bond.

6.3.2.3 The contractor can recommend improvements to the project, for materials, equipment, articles, or systems by means of a substitution request, even if the improvements are at an additional cost. The Contracting Officer shall make the final determination to accept or reject contractor's proposed improvements. If the proposal material, equipment, article or system cost less than the specified item, the Department will require a sharing of cost similar to value engineering be implemented. State reserves its right to deny a substitution; and if a substitution is denied, the contractor is not entitled to additional compensation or time extension.

6.3.2.4 If the specified material and / or equipment inadvertently lists only a single manufacturer.

6.3.3 A substitution request after Contract Award shall be fully explained in writing. Contractor shall provide brochures showing that the substitute material and / or equipment is equal or better in essential features and also provide a matrix showing comparison of the essential features. Contractor shall justify its request and include quantities and unit prices involved, respective supplier's price quotations and such other documents necessary to fully support the request. Any savings in cost will be credited to the Department. Contractor shall absorb any additional cost for the substitute item(s) or for its installation. Submitting a substitution request, does not imply that substitutions, for brand name specified materials and equipment, will be allowed. The Engineer may reject and deny any request deemed irregular or not in the best interest of the Department. A request for substitution shall not in any way be grounds for an extension of contract time. At the discretion of the Engineer, a time extension may be granted for an approved substitution.

6.4 ASBESTOS CONTAINING MATERIALS - The use of materials or equipment containing asbestos is prohibited under this contract. Contractor warrants that all materials and equipment incorporated in the project are asbestos-free.

6.5 TEST SAMPLES

6.5.1 The Engineer may require any or all materials to be tested by means of samples or otherwise. Contractor shall collect and forward samples requested by the Engineer. Contractor shall not use or incorporate any material represented by the samples until all required tests have been made and the material has been accepted. In all cases, the Contractor shall furnish the required samples without charge. Where samples are required from the completed work, the Contractor shall cut and furnish samples from the completed work. Samples so removed shall be replaced with identical material and refinished. No additional compensation will be allowed for furnishing test samples and their replacement with new materials.

6.5.2 Tests of the material samples will be made in accordance with the latest standards of the American Society for Testing and Materials (ASTM), as amended prior to the contract date unless otherwise provided. In cases where a particular test method is necessary or specifications and serial numbers are stipulated, the test shall be made by the method stated in the above-mentioned publication. Where the test reference is the American Association of State Highway and Transportation Officials (AASHTO), it means the specifications and serial numbers of the latest edition and amendments prior to the bid date.

6.5.3 The Engineer may retest any materials which have been tested and accepted at the source of supply after the same has been delivered to the work site. The Engineer shall reject all materials which, when retested, do not meet the requirements of the contract.

6.6 MATERIAL SAMPLES

6.6.1 The Contractor shall furnish all samples required by the drawings and specifications or that may be requested by the Engineer of any and all materials or equipment it proposes to use. Unless specifically required, samples are not to be submitted with the bid.

6.6.2 No materials or equipment of which samples are required shall be used on the Work until the Engineer has received and accepted the samples. If the Contractor proceeds to use such materials before the Engineer accepts the samples, the Contractor shall bear the risk.

6.6.3 Contractor shall furnish two (2) copies of a transmittal letter with each shipment of samples, The letter shall provide a list of the samples, the name of the building or work for which the materials are intended and the brands of the materials and names of the manufacturers. Also, each sample submitted shall have a label indicating the material represented, its place of origin, the names of the producer, the Contractor and the building or work for which the material is intended. Samples of finished materials shall be marked to indicate where the materials represented are required by the drawings or specifications.

6.6.4 Acceptance of any sample(s) shall be only for the characteristics or for the uses named in such acceptance and for no other purpose. Acceptance of samples shall not change or modify any contract requirement. All samples will be provided by the Contractor at no extra cost to the Department. See also Section 5.4 SHOP DRAWINGS AND OTHER SUBMITTALS.

6.7 NON-CONFORMING MATERIALS - All materials not conforming to the requirements of these contract documents, whether in place or not, shall be rejected and removed immediately from the site of work unless otherwise permitted by the Engineer in writing. No rejected material which has subsequently been made to conform shall be used unless and until written acceptance has been given by the Engineer. If the Contractor fails to comply forthwith with any order of the Engineer made under the provisions of this Section 6.7, the Engineer shall have the authority to remove and

replace non-conforming materials and charge the cost of removal and replacement to the Contractor.

6.8 HANDLING MATERIALS - Contractor shall handle all materials to preserve their quality and fitness for work. Transport aggregates from the source or storage site to the work in tight vehicles to prevent loss or segregation of materials after loading and measuring.

6.9 STORAGE OF MATERIALS - Contractor shall store all materials to preserve their quality and fitness for the work. Unless otherwise provided, any portion of the project site within the Project Contract Limit not required for public travel, may be used for storage purposes and for the Contractor's plant and equipment. Any additional space required shall be provided by the Contractor at its expense subject to the Engineer's acceptance. Contractor shall store materials on wooden platforms or other hard, clean surfaces and covered to protect it from the weather and damage. Stored materials shall be located to allow prompt inspection.

6.10 PROPERTY RIGHTS IN MATERIALS - Nothing in the contract shall be construed to vest in the Contractor any right to any materials and equipment after such materials and equipment have been attached, affixed to, or placed in the work.

6.11 ASSIGNMENT OF ANTITRUST CLAIMS FOR OVERCHARGES FOR GOODS PURCHASED - Contractor (or Vendor) and the Department recognize that in actual economic practice, overcharges resulting from antitrust violations are in fact usually borne by the Department. Therefore, Contractor hereby assigns to the Department any and all claims for such overcharges as to goods purchased in connection with this order or contract, except as to overcharges which result from antitrust violations commencing after the price is established under this order or contract and any change order. In addition, Contractor warrants and represents that each of its first tier suppliers and subcontractors shall assign any and all such claims to the Department, subject to the aforementioned exception.

ARTICLE 7 - Prosecution and Progress
(Including Legal Relations and Responsibility)

7.1 PROSECUTION OF THE WORK

7.1.1 After approval of the contract by the Department of Defense, a Notice to Proceed will be given to the Contractor as described in Section 3.10 NOTICE TO PROCEED. The Notice to Proceed will indicate the date the Contractor is expected to begin the construction and from which date contract time will be charged.

7.1.2 The Contractor shall begin work no later than ten (10) working days from the date in the Notice to Proceed and shall diligently prosecute the same to completion within the contract time allowed. The Contractor shall notify the Engineer at least three (3) working days before beginning work.

7.1.3 If any subsequent suspension and resumption of work occurs, the Contractor shall notify the Engineer at least twenty-four (24) hours before stopping or restarting actual field operations.

7.1.4 Working Prior to Notice to Proceed - The Contractor shall not begin work before the date in the Notice to Proceed. Should the Contractor begin work before receiving the Notice to Proceed, any work performed in advance of the specified date will be considered as having been done at the Contractor's risk and as a volunteer and subject to the following conditions:

7.1.4.1 Under no circumstances shall the Contractor commence work on site until it has notified the Engineer of its intentions and has been advised by the Engineer in writing that the project site is available to the Contractor. The project site will not be made available until the Contractor has complied with commencement requirements under Section 7.2 COMMENCEMENT REQUIREMENTS.

7.1.4.2 In the event the contract is not executed, the Contractor shall, at its own expense, do such work as is necessary to leave the site in a neat condition to the satisfaction of the Engineer. The Contractor shall not be reimbursed for any work performed.

7.1.4.3 All work done prior to the Notice to Proceed shall be performed in accordance with the contract documents, but will only be considered authorized work and be paid for as provided in the contract after the Notice to Proceed is issued.

7.1.5 For repairs and/or renovations of existing buildings, unless otherwise permitted by the Engineer, the Contractor shall not commence with the physical construction unless all or sufficient amount of materials are available for either continuous construction or completion of a specified portion of the work. When construction is started, the Contractor shall work expeditiously and pursue the work diligently until it is complete. If only a portion of the work is to be done in stages, the Contractor shall leave the area safe and usable for the user agency at the end of each stage.

7.2 COMMENCEMENT REQUIREMENTS - Prior to beginning work on site, the Contractor shall submit the following to the Engineer:

7.2.1 Identification of the Superintendent or authorized representative on the job site. Refer to Section 5.8 COOPERATION BETWEEN THE CONTRACTOR AND THE DEPARTMENT.

7.2.2 Proposed Working Hours on the job. Refer to Section 7.5 NORMAL WORKING HOURS.

7.2.3 Permits and Licenses. Refer to Section 7.4 PERMITS AND LICENSES.

7.2.4 Schedule of Prices to be accepted for the agreed Monthly Payment Application. Unless the proposal provides unit price bids on all items in this project, the successful Bidder will be required, after the award of contract, to submit a schedule of prices for the various items of construction included in the contract. For projects involving more than a single building and / or facility, the breakdown cost shall reflect a separate schedule of prices for the various items of work for each building and/or facility. The sum of the prices submitted for the various items must equal the lump sum bid in the Bidder's proposal. This schedule will be subject to acceptance by the Engineer who may reject same and require the bidder to submit another or several other schedules if in the Engineer's opinion the prices are unbalanced or not sufficiently detailed. This schedule of prices shall be used for the purpose of determining the value of monthly payments due the Contractor for work installed complete in place; and may be used as the basis for determining cost and credit of added or deleted items of work, respectively.

7.2.4.1 The Contractor shall estimate at the close of each month the percentage of work completed under each of the various construction items during such month and submit the Monthly Payment Application to the Engineer for review and approval. The Contractor shall be paid the approved percentage of the price established for each item less the retention provided in Section 8.4 PROGRESS PAYMENTS.

7.2.5 Proof of Insurance Coverage. Certificate of Insurance or other documentary evidence satisfactory to the Contracting Officer that the Contractor has in place all insurance coverage required by the contract. The Certificate of Insurance shall contain wording which identifies the Project number and Project title for which the certificate of insurance is issued. Refer to Section 7.3 INSURANCE REQUIREMENTS.

7.2.6 Until such time as the above items are processed and approved, the Contractor shall not be allowed to commence on any operations unless authorized by the Engineer.

7.3 INSURANCE REQUIREMENTS

7.3.1 Obligation of Contractor - Contractor shall not commence any work until it obtains, at its own expense, all required herein insurance. Such insurance shall be provided by an insurance company authorized by the laws of the State to issue such insurance in the State of Hawaii. Coverage by a "Non-Admitted" carrier is permissible provided the carrier has a Best's Rating of "A-VII" or better.

7.3.2 All insurance described herein will be maintained by the Contractor for the full period of the contract and in no event will be terminated or otherwise allowed to lapse prior to written certification of final acceptance of the work by the State.

7.3.3 Certificate(s) of Insurance acceptable to the State shall be filed with the Engineer prior to commencement of the work. Certificates shall identify if the insurance company is a "captive" insurance company or a "Non-Admitted" carrier to the State of Hawaii. The best's rating must be stated for the "Non-Admitted" carrier. Certificates shall contain a provision that coverage's being certified will not be cancelled or materially changes without giving the Engineer at least thirty (30) days prior written notice. If the State is to be an Additional Insured on any of the required insurance, it shall be so noted on the certificate. Should any policy be canceled before final acceptance of the work by the State, and the Contractor fails to immediately procure replacement insurance as specified, the State, in addition to all other remedies it may have for such breach, reserves the right to procure such insurance and deduct the cost thereof from any money due to the Contractor.

7.3.4 Nothing contained in these insurance requirements is to be construed as limiting the extent of Contractor's responsibility for payment of damages resulting from its operations under this contract, including the Contractor's obligation to pay performance liquidated damages, nor shall it affect the Contractor's separate and independent duty to defend, indemnify and hold the State harmless pursuant to other provisions of this contract. In no instance will the State's exercise of an option to occupy and use completed portions of the work relieve the Contractor of its obligation to maintain the required insurance until the date of final acceptance of the work.

7.3.5 All insurance described herein shall be primary and cover the insured for all work to be performed under the contract, all work performed incidental thereto or directly or indirectly connected therewith, including

traffic detour work or other work performed outside the work area and all change order work.

7.3.6 The Contractor shall, from time to time, furnish the Engineer, when requested, satisfactory proof of coverage of each type of insurance required covering the work. Failure to comply with the Engineer's request may result in suspension of the work, and shall be sufficient grounds to withhold future payments due the Contractor and to terminate the contract for Contractor's default.

7.3.7 Types of Insurance - Contractor shall purchase and maintain insurance described below which shall provide coverage against claims arising out of the Contractor's operations under the contract, whether such operations be by the Contractor itself or by any subcontractor or by anyone directly or indirectly employed by any of them or by anyone for whose acts any of them may be liable.

7.3.7.1 Worker's Compensation -The Contractor shall obtain worker's compensation insurance for all persons whom they employ in carrying out the work under this contract. This insurance shall be in strict conformity with the requirements of the most current and applicable State of Hawaii Worker's Compensation Insurance laws in effect on the date of the execution of this contract and as modified during the duration of the contract.

7.3.7.2 General Liability - The Contractor shall obtain General Liability insurance with a limit of not less than $2,000,000 per occurrence and in the Aggregates. The General liability insurance shall include the State as an Additional Insured. The required limit of insurance may be provided by a single policy or with a combination of primary and excess polices. Refer to SPECIAL CONDITIONS for any additional requirements.

7.3.7.3 Auto Liability - The Contractor shall obtain Auto Liability Insurance covering all owned, non-owned and hired autos with a combined single Limit of not less than $1,000,000 per occurrence. The required limit of insurance may be provided by a single policy or with a combination of primary and excess polices. Refer to SPECIAL CONDITIONS for any additional requirements.

7.3.7.4 Property Insurance (Builders Risk)

(1) New Building(s) - The Contractor shall obtain Property Insurance covering building(s) being constructed under this Contract. The limit shall be equal to the completed value of the building(s) and shall insure against all-loss excluding earthquakes and floods. The coverage shall be provided by a company authorized to write insurance in the State of Hawaii as an insurer.

(2) Building Renovation and / or Installation Contract - The Contractor shall obtain Property Insurance with a limit equal to the completed value of the work or property being installed and shall insure against all-loss excluding earthquakes and floods. The coverage shall be provided by a company authorized to write insurance in the State of Hawaii as an insurer. Refer to SPECIAL CONDITIONS for any additional requirements.

(3) The Contractor is not required to obtain property insurance for contracts limited to site development

7.4 PERMITS AND LICENSES

7.4.1 The State or its representative may process Federal (e.g. Corps of Engineers), State and County Permit applications. The Contractor shall pick up the pre-processed Permits at the appropriate governmental agency and pay the required fees. Other permits necessary for the proper execution of the work such as utility connection permits, elevator installation permits etc., unless processed by the State and paid for by the Contractor, shall be obtained and paid for by the Contractor.

7.4.2 Until such time as the above permits are approved, the Contractor shall not be allowed to commence any operations without written approval of the Engineer.

7.4.3 The Engineer reserves the right to waive application and processing of the building permit.

7.5 NORMAL WORKING HOURS - Prior to beginning operations, unless otherwise established by the State, the Contractor shall notify the Engineer in writing of the time in hours and minutes, A.M. and P.M. respectively, at which it desires to begin and end the day's work. If the Contractor desires to change the working hours, it shall request the Engineer's approval three (3) consecutive working days prior to the date of the change.

7.6 HOURS OF LABOR (Section 104-2 Hawaii Revised Statutes)

7.6.1 No laborer or mechanic employed on the job site of any public work of the Department or any political sub-division thereof shall be permitted or required to work on Saturday, Sunday or a legal holiday of the State or in excess of eight hours on any other day unless the laborer or mechanic receives overtime compensation for all hours worked on Saturday, Sunday and a legal holiday of the State or in excess of eight hours on any

other day. For the purposes of determining overtime compensation under this Section 7.6, the basic hourly rate of any laborer or mechanic shall not be less than the basic hourly rate determined by the Department of Labor and Industrial Relations to be the prevailing basic hourly rate for corresponding classes of laborers and mechanics on projects of similar character in the Department.

7.6.2 Overtime compensation means, compensation based on one and one-half times the laborers or mechanics basic hourly rate of pay plus the cost to an employer of furnishing a laborer or mechanic with fringe benefits.

7.7 PREVAILING WAGES - (§ 104-2 HRS)

7.7.1 The Contractor shall at all times observe and comply with all provisions of Chapter 104, HRS, the significant requirements of which are emphasized in the Department of Labor and Industrial Relations Publication No. H104-3 entitled 'Requirements of Chapter 104, HRS Wages and Hours of Employees on Public Works Law'.

7.7.2 Wage Rate Schedule - The wage rate schedule is not physically enclosed in the bid documents. However, the wage rate schedule is incorporated herein by reference and made a part of the Bid and Contract Documents. Said wage rate schedule may be obtained from the Contracts Office, Department of Accounting and General Services, 1151 Punchbowl Street, Room 422, Honolulu, Hawaii or, via the FAX-ON-DEMAND system of the Department of Labor and Industrial Relations, phone number (808) 586-8695. When the bid documents are made available on respective neighbor islands, copies of the wage rate schedule may also be obtained from the office of the respective neighbor island DAGS District Office.

7.7.3 The Contractor or its subcontractor(s) shall pay all laborers and mechanics employed on the job site, unconditionally and not less often than once a week, and without deduction or rebate on any account except as allowed by law, the full amounts of their wages including overtime, accrued to not more than five (5) working days prior to the time of payment, at wage rates not less than those stated in the contract, regardless of any contractual relationship which may be alleged to exist between the Contractor and subcontractor and such laborers and mechanics. The wages stated in the contract shall not be less than the minimum prevailing wages (basic hourly rate plus fringe benefits), as determined by the Director of Labor and Industrial Relations and published in wage rate schedules. Any increase in wage rates, as determined by the Director of Labor and Industrial Relations and issued in the wage rate schedule, shall be applicable during the performance of the contract, in accordance with section 104-2(a) and (b), Hawaii Revised Statutes. Notwithstanding the provisions of the original contract, if the Director of Labor and Industrial Relations determines that prevailing wages have increased during the performance of the contract, the rate of pay of laborers and mechanics shall be raised accordingly.

7.7.4 Posting Wage Rate Schedule - The rates of wages to be paid shall be posted by the Contractor in a prominent and easily accessible place at the job site and a copy of such wages required to be posted shall be given to each laborer and mechanic employed under the contract by the Contractor at the time the person is employed thereunder, provided that where there is a collective bargaining agreement, the Contractor does not have to provide its employees the wage rate schedules. Any revisions to the schedule of wages issued by the Director of Labor and Industrial Relations during the course of the contract shall also be posted by the Contractor and a copy provided to each laborer and mechanic employed under the contract as required above.

7.7.5 The Engineer may withhold from the Contractor so much of the accrued payments as the Engineer may consider necessary to pay to laborers and mechanics employed by the Contractor or any subcontractor on the job site. The accrued payments withheld shall be the difference between the wages required by this contract and the wages actually received by such laborers or mechanics.

7.8 FAILURE TO PAY REQUIRED WAGES (§ 104-4, HRS) - If the Department finds that any laborer or mechanic employed on the job site by the Contractor or any subcontractor has been or is being paid wages at a rate less than the required rate by the contract, or has not received their full overtime compensation, the Department may, by written notice to the Contractor, terminate its right, or the right of any subcontractor, to proceed with the work or with the part of the work on which the required wages or overtime compensation have not been paid and may complete such work or part by contract or otherwise, and the Contractor and its sureties shall be liable to the Department for any excess costs occasioned thereby.

7.9 PAYROLLS AND PAYROLL RECORDS (§ 104-3 HRS)

7.9.1 A certified copy of each weekly payroll shall be submitted to the Engineer within seven (7) calendar days after the end of each weekly payroll period. Failure to do so on a timely basis shall be cause for disqualification from bidding in accordance with the provisions of Section 2.12 DISQUALIFICATION OF BIDDERS. The Contractor shall be responsible for the timely submission of certified copies of payrolls of all

subcontractors. The certification shall affirm that payrolls are correct and complete, that the wage rates contained therein are not less than the applicable rates contained in the wage determination decision, any amendments thereto during the period of the contract, and that the classifications set forth for each laborer and mechanic conform with the work they performed.

7.9.2 Payroll records for all laborers and mechanics working at the site of the work shall be maintained by the General Contractor and its subcontractors, if any, during the course of the work and preserved for a period of four (4) years thereafter. Such records shall contain the name of each employee, their correct classification, rate of pay, daily and weekly number of hours worked, itemized deductions made and actual wages paid. Such records shall be made available for inspection at a place designated by the Engineer, the Director of Labor and any authorized persons who may also interview employees during working hours on the job site.

7.9.3 Note that the falsification of certifications noted in this Section 7.9 may subject the Contractor or subcontractor to penalties and debarment under the laws referenced in Section 7.14 LAWS TO BE OBSERVED and / or criminal prosecution.

7.9A APPRENTICESHIP AGREEMENT CERTIFICATION (HRS §103-55.6)

7.9A.1 For the duration of a contract awarded and executed utilizing the apprenticeship agreement preference, the Contractor shall certify for each month that work is being conducted on the project, that it continues to be a participant in the relevant registered apprenticeship program for each trade it employs.

7.9A.2 Monthly certification shall be made by completing the *Monthly Report of Contractor's Participation – Form 2* made available by the State Department of Labor and Industrial Relations, the original to be signed by the respective apprenticeship program sponsors authorized official, and submitted by the Contractor to the Engineer with its monthly payment requests. The *Monthly Report of Contractor's Participation – Form 2* is available on the DLIR website at: http://hawaii.gov/labor/wdd.

7.9A.3 Should the Contractor fail or refuse to submit its *Monthly Report of Contractor's Participation – Form 2,* or at any time during the duration of the contract, cease to be a party to a registered apprenticeship agreement for any of the apprenticeable trades the Contractor employs, or will employ, the Contractor will be subject to the following sanctions:

7.9A.3.1 Withholding of the requested payment until all of the required *Monthly Report of Contractor's Participation – Form 2*s are properly completed and submitted.

7.9A.3.2 Temporary or permanent cessation of work on the project, without recourse to breach of contract claims by the Contractor; provided the Department shall be entitled to restitution for nonperformance or liquidated damages claims; or

7-9A.3.3 Proceedings to debar or suspend pursuant to HRS §103D-702.

7.9A.4 If events such as "acts of God", acts of public enemy, acts of the State or any other governmental body in its sovereign or contractual capacity, fires, floods, epidemics, freight embargoes, unusually severe weather, or strikes or other labor disputes prevent the Contractor from submitting the *Monthly Report of Contractor's Participation - Form 2*, the Contractor shall not be penalized as provided herein, provided the Contractor completely and expeditiously complies with the certification process when the event is over.

7.10 OVERTIME AND NIGHT WORK

7.10.1 Overtime work shall be considered as work performed in excess of eight (8) hours in any one day or work performed on Saturday, Sunday or legal holiday of the State. Overtime and night work are permissible when approved by the Engineer in writing, or as called for elsewhere within these GENERAL CONDITIONS.

7.10.2 Overtime Notification - Contractor shall notify the Engineer in writing at least two (2) working days prior to doing overtime and night work, to insure proper inspection will be available. The notification shall address the specific work to be done. A notification is not required when overtime work and night work are included as normal working hours in the contract and in the contractor's construction schedule.

7.10.3 In the event that work other than that contained in the above notification is performed and for which the Engineer determines State inspection services were necessary but not available because of the lack of notification, the Contractor may be required to remove all such work and perform the work over again in the presence of State inspection personnel.

7.10.4 Any hours worked in excess of the normal eight (8) working hours per day or on Saturdays, Sundays or legal State holidays will not be considered a working day.

7.10.5 The State hereby reserves the right to cancel the overtime, night, Saturday, Sunday or legal State holiday work when it is found that work during these periods is detrimental to the public welfare or the user agency.

7.11 OVERTIME AND NIGHT PAYMENT FOR STATE INSPECTION SERVICE

7.11.1 The Department is responsible for overtime or night time payments for Department's inspection services, including Department's Inspector, State staff personnel and the Department's Consultant(s) engaged on the project, when overtime and night work are included as normal working hours in the contract and in the contractor's construction schedule.

7.11.2 Whenever the Contractor's operations require the State's inspection and staff personnel to work overtime or at night, the Contractor shall reimburse the State for the cost of such services unless otherwise instructed in the Contract. The Engineer will notify the Contractor of the
minimum number of required Department employees and other personnel engaged by the Department prior to the start of any such work. The costs chargeable to the Contractor shall include but not be limited to the following:

7.11.2.1 The cost of salaries which are determined by the State and includes overtime and night time differential for the Department's staff and inspection personnel. In addition to the cost of the salaries, the Contractor shall reimburse the State's share of contributions to the employee's retirement, medical plan, social security, vacation, sick leave, worker's compensation funds, per diem, and other applicable fringe benefits and overhead expenses.

7.11.2.2 The transportation cost incurred by the Department's staff and inspection personnel which are based on established rental rates or mileage allowance in use by the Department for the particular equipment or vehicle.

7.11.2.3 Fees and other costs billed the State by Consultants engaged on the project for overtime and/or night time work.

7.11.3 Payment for Inspection Services - The monies due the Department for staff and inspection work and use of vehicles and equipment as determined in subsection 7.11.2 shall be deducted from the monies due or to become due the Contractor. In any and all events, the Contractor shall not pay the Department's employees directly.

7.12 LIMITATIONS OF OPERATIONS

7.12.1 Contractor shall at all times conduct the work in such manner and in such sequence as will insure the least practicable interference with pedestrian and motor traffic passageways. The Contractor shall furnish convenient detours and provide and plan all other appropriate signs, flashers, personnel, warnings, barricades and other devices for handling pedestrian and motor traffic.

7.12.2 In the event that other contractors are also employed on the job site, the Contractor shall arrange its work and dispose of materials so as not to interfere with the operations of the other contractors engaged upon adjacent work. The Contractor shall join its work to that of others and existing buildings in a proper manner, and in accordance with the drawings and specifications, and perform its work in the proper sequence in relation to that of others, all as may be directed by the Engineer.

7.12.3 Each Contractor shall be responsible for any damage done by it to work performed by another contractor. Each Contractor shall so conduct its operations and maintain the work in such condition that adequate drainage shall be in effect at all times.

7.12.4 In the event that the Contractor fails to prosecute its work as provided in this Section 7.12 or disregards the directions of the Engineer, the Engineer may suspend the work until such time as the Contractor provides for the prosecution of the work with minimum interference to traffic and passageways or other contractors, adequate drainage, the repair of damage and complies with the direction of the Engineer. No payment will be made for the costs of such suspension.

7.13 ASSIGNMENT OR CHANGE OF NAME §3-125-14 HAR

7.13.1 Assignment - The Contractor shall not sublet, sell, transfer, assign or otherwise dispose of this contract or any part hereof or any right, title or interest herein or any monies due or to become due hereunder without the prior written consent of the Engineer.

7.13.2 The Contractor may assign money due or to become due it under the contract and such assignment will be recognized by the Department, if given proper notice thereof, to the extent permitted by law; but any assignment of monies shall be subject to all proper set-offs in favor of the State and to all deductions provided in the contract and particularly all monies withheld or unpaid, whether assigned or not, shall be to use by the Department for the completion of the work in the event that the Contractors should be in default therein.

7.13.3 Recognition of a Successor in Interest; Assignment - When in the best interest of the State, a

successor in interest may be recognized in an assignment agreement in which the transferor and the transferee and the State shall agree that:

7.13.3.1 The transferee assumes all of the transferor's obligations;

7.13.3.2 Transferor remains liable for all obligations under the contract but waives all rights under the contract against the State; and

7.13.3.3 The transferor shall continue to furnish, and the transferee shall also furnish, all required bonds.

7.13.4 Change of Name - When a Contractor requests to change the name in which it holds a contract with the State, the Engineer shall, upon receipt of a document indicating such change of name (for example: an amendment to the articles of incorporation of the corporation), enter into an agreement with the requesting Contractor to effect such a change of name. The agreement changing the name shall specifically indicate that no other terms and conditions of the contract are thereby changed.

7.13.5 All change of name or novation agreements effected hereunder other than by the Engineer shall be reported to the Engineer within thirty (30) days of the date that the agreement becomes effective.

7.13.6 Notwithstanding the provisions of paragraphs 7.13.3.1 through 7.13.3.3 above, when a Contractor holds contracts with more than one purchasing agency of the State, the novation or change of name agreements herein authorized shall be processed only through the Department of Defense, State of Hawaii.

7.14 LAWS TO BE OBSERVED

7.14.1 The Contractor at all times shall observe and comply with all Federal, State and local laws or ordinances, rules and regulations which in any manner affect those engaged or employed in the work, the materials used in the work, and the conduct of the work. The Contractor shall also comply with all such orders and decrees of bodies or tribunals having any jurisdiction or authority over the work. Any reference to such laws, ordinances, rules and regulations shall include any amendments thereto before and after the date of this contract.

7.14.2 The Contractor shall defend, protect, hold harmless and indemnify the State and its Departments and Agencies and all their officers, representatives, employees or agents against any claim or liability arising from or based on the violation of any such laws, ordinances, rules and regulations, orders or decrees, whether such violation is committed by the Contractor or its Subcontractor(s) or any employee of either or both. If any discrepancy or inconsistency is discovered in the contract for the work in relation to any such laws, ordinances, rules and regulations, orders or decrees, the Contractor shall forthwith report the same to the Engineer in writing.

7.14.3 While the Contractor must comply with all applicable laws, attention is directed to: Wage and Hours of Employees on Public Works, Chapter 104, Hawaii Revised Statutes (HRS); Hawaii Public Procurement Code, Authority to debar or suspend, Section 103D-702, HRS; Hawaii Employment Relations Act, Chapter 377, HRS; Hawaii Employment Security Law, Chapter 383, HRS; Worker's Compensation Law, Chapter 386, HRS; Wage and Hour Law, Chapter 387, HRS; Occupational Safety and Health, Chapter 396, HRS; and Authority to Debar or Suspend, Chapter 126, subchapter 2, Hawaii Administrative Rules (HAR).

7.15 PATENTED DEVICES, MATERIALS AND PROCESSES - If the Contractor desires to use any design, device, material, or process covered by letters of patent or copyright, the right for such use shall be procured by the Contractor from the patentee or owner. The Contractor shall defend, protect, indemnify and hold harmless the State and its Departments and Agencies, any affected third party, or political subdivision from any and all claims for infringement by reason of the use of any such patented design, device, material or process, or any trademark or copyright in connection with the work to be performed under the contract, shall defend, protect, indemnify and hold harmless the State and its Departments and Agencies for any costs, expenses and damages which it may be obligated to pay by reason of any such infringement at any time during the prosecution or after the completion of the work. This section shall not apply to any design, device, material or process covered by letters of patent or copyright, which the Contractor is required to use by the drawings or specifications.

7.16 SANITARY, HEALTH AND SAFETY PROVISIONS

7.16.1 The Contractor shall provide and maintain in a neat, sanitary condition such accommodations for the use of its employees as may be necessary to comply with the requirements of the State and local Boards of Health, or other bodies or tribunals having jurisdiction. Unless otherwise stated in the drawings or specifications, the Contractor shall install toilet facilities conveniently located at the job site and maintain same in a neat and sanitary condition for the use of the employees on the job site for the duration of the contract. The toilet facilities shall conform to the requirements of the State

Department of Health. The cost of installing, maintaining and removing the toilet facilities shall be considered incidental to and paid for under various contract pay items for work or under the lump sum bids as the case may be, and no additional compensation will be made therefore. These requirements shall not modify or abrogate in any way the requirements or regulations of the State Department of Health.

7.16.2 Attention is directed to Federal, State and local laws, rules and regulations concerning construction safety and health standards. The Contractor shall not require any worker to work in surroundings or under conditions which are unsanitary, hazardous or dangerous to their health or safety.

7.17 PROTECTION OF PERSONS AND PROPERTY

7.17.1 Safety Precautions and Programs - The Contractor shall be responsible for initiating, maintaining and supervising all safety precautions and programs in connection with the performance of the Contract. The Contractor shall take reasonable precautions for the safety of, and shall provide reasonable protection to prevent damage, injury or loss to:

7.17.1.1 All persons on the Work site or who may be affected by the Work;

7.17.1.2 All the Work and materials and equipment to be incorporated therein, whether in storage on or off the site, under care, custody or control of the Contractor and its subcontractors; and

7.17.1.3 Other property at the site or adjacent thereto, including trees, shrubs lawns walks pavement, roadways structures, and utilities not designated for removal, relocation or replacement in the course of construction.

7.17.2 Contractor shall give notices and comply with applicable laws, ordinances, regulations, rules, and lawful orders of any public body having jurisdiction for the safety of persons or property or their protection from damage, injury or loss; and the Contractor shall erect and maintain reasonable safeguards for safety and protection, including posting danger signs, or other warnings against hazards.

7.17.3 The Contractor shall notify Owners of adjacent properties and of underground (or overhead) utilities when performing work, which may affect the Owners; and shall cooperate with the Owners in the protection, removal and replacement of their property.

7.17.4 All damage, injury or loss to any property referred to in paragraphs 7.17.1.2 and 7.17.1.3 caused by the fault or negligence or damage or loss attributable to acts or omissions directly or indirectly in whole or part by the Contractor a subcontractor or any one directly or indirectly employed by them, or by anyone for whose acts they might be liable, shall be remedied promptly by the Contractor.

7.17.5 The Contractor shall designate a responsible member of the Contractor's organization at the site whose duty shall be the protection of accidents. This person shall be the Contractor's superintendent unless otherwise designated by the Contractor

7.17.6 The Contractor shall not load or permit any part of the construction to be loaded so as to endanger its safety. The Contractor shall not injure or destroy trees or shrubs nor remove or cut them without permission of the Engineer. Contractor shall protect all land monuments and property marks until an authorized agent has witnessed or otherwise referenced their location and shall not remove them until directed.

7.17.7 In the event the Contractor encounters on the site, material reasonably believed to be asbestos or other hazard material that has not been rendered harmless, the Contractor shall stop work in the area and notify the Engineer promptly. The work in the affected area shall be resumed in the absence of hazard materials or when the hazard has been rendered harmless.

7.17.8 Emergencies - In an emergency affecting the safety and protection of persons or the Work or property at the site or adjacent thereto, Contractor without special instructions or authorization from the Engineer, shall act, at the Contractor's discretion, to prevent threatened damage, injury or loss. Contractor shall give the Engineer prompt written notice of the emergency and actions taken. Additional compensation or extension of time claimed by the Contractor on account of an emergency shall be determined under the provisions of Section 7.25 DISPUTES AND CLAIMS.

7.18 ARCHAEOLOGICAL SITES

7.18.1 Should historic sites such as walls, platforms, pavements and mounds, or remains such as artifacts, burials, concentration of charcoal or shells be encountered during construction, work shall cease in the immediate vicinity of the find and the find shall be protected from further damage. The Contractor shall immediately notify the Engineer and contact the State Historic Preservation Division which will assess the significance of the find and recommend the appropriate mitigation measures, if necessary.

7.18.2 When required, the Contractor shall provide and install any temporary fencing as shown on the drawings to protect archaeological sites within the project. The fencing shall be installed prior to any construction activity and shall be maintained by the Contractor for the duration of the project. Fence installation and maintenance shall be to the satisfaction of the Engineer. The Contractor shall remove the fencing upon completion of construction, or as directed by the Engineer.

7.18.3 No work shall be done within the temporary fencing area. If any construction work is done within the temporary fencing, the Contractor shall notify the Engineer immediately; and if the Contractor entered the archaeological site area without permission, it shall stop work in this area immediately. The Engineer shall notify the archaeologist to assess any damage to the area. The Contractor shall allow the archaeologist sufficient time to perform the field investigation.

7.18.4 Any site requiring data recovery within the project shall not be disturbed until data recovery is completed.

7.19 RESPONSIBILITY FOR DAMAGE CLAIMS; INDEMNITY

7.19.1 The Contractor shall indemnify the State and the Department against all loss of or damage to the State's or the Department's existing property and facilities arising out of any act or omission committed in the performance of the work by the Contractor, any subcontractor or their employees and agents. Contractor shall defend, hold
harmless and indemnify the Department and the State, their employees, officers and agents against all losses, claims, suits, liability and expense, including but not limited to attorneys' fees, arising out of injury to or death of persons (including employees of the State and the Department, the Contractor or any subcontractor) or damage to property resulting from or in connection with performance of the work and not caused solely by the negligence of the State or the Department, their agents, officers and employees. The State or the Department may participate in the defense of any claim or suit without relieving the Contractor of any obligation hereunder. The purchase of liability insurance shall not relieve the Contractor of the obligations described herein.

7.19.2 The Contractor agrees that it will not attempt to hold the State and its Departments and Agencies and their officers, representatives, employees or agents, liable or responsible for any losses or damages to third parties from the action of the elements, the nature of the work to be done under these GENERAL CONDITIONS or from any unforeseen obstructions, acts of God, vandalism, fires or encumbrances which may be encountered in the prosecution of the work.

7.19.3 The Contractor shall pay all just claims for materials, supplies, tools, labor and other just claims against the Contractor or any subcontractor in connection with this contract and the surety bond will not be released by final acceptance and payment by the Department unless all such claims are paid or released. The
Department may, but is not obligated to, withhold or retain as much of the monies due or to become due the Contractor under this contract considered necessary by the Engineer to cover such just claims until satisfactory proof of payment or the establishment of a payment plan is presented.

7.19.4 The Contractor shall defend, indemnify and hold harmless the State and its Departments and Agencies and their officers, representatives, employees or agents from all suits, actions or claims of any character brought on account of any claims or amounts arising out of or recovered under the Workers' Compensation Laws or violation of any other law, by-law, ordinance, order or decree.

7.20 CHARACTER OF WORKERS OR EQUIPMENT

7.20.1 The Contractor shall at all times provide adequate supervision and sufficient labor and equipment for prosecuting the work to full completion in the manner and within the time required by the contract.

7.20.2 Character and Proficiency of Workers - All workers shall possess the proper license and / or certification, job classification, skill and experience necessary to properly perform the work assigned to them. All workmen engaged in special work or skilled work such as bituminous courses or mixtures, concrete pavement or structures, electrical installation, plumbing installation, or in any trade shall have sufficient experience in such work and in the operation of the equipment required to properly and satisfactorily perform all work. All workers shall make due and proper effort to execute the work in the manner prescribed in these GENERAL CONDITIONS, otherwise, the Engineer may take action as prescribed herein.

7.20.2.1 Any worker employed on the project by the Contractor or by any subcontractor who, in the opinion of the Engineer, is not careful and competent, does not perform its work in a proper and skillful manner or is disrespectful, intemperate, disorderly or neglects or refuses to comply with directions given, or is otherwise objectionable shall at the written request of the Engineer,

be removed forthwith by the Contractor or subcontractor employing such worker and shall not be employed again in any portion of the work without the written consent of the Engineer. Should the Contractor or subcontractor continue to employ, or again employ such person or persons on the project, the Engineer may withhold all payments which are or may become due, or the Engineer may suspend the work until the Engineer's orders are followed, or both.

7.20.3 Insufficient Workers - A sufficient number of workers shall be present to ensure the work is accomplished at an acceptable rate. In addition, the proper ratio of apprentice to journey worker shall be maintained to ensure the work is properly supervised and performed. In the event that the Engineer finds insufficient workers are present to accomplish the work at an acceptable rate of progress or if a adequate number of journey workers are not present and no corrective action is taken by the Contractor after being informed in writing, the Engineer may terminate the contract as provided for under Section 7.27 TERMINATION OF CONTRACT FOR CAUSE.

7.20.4 Equipment Requirements - All equipment furnished by the Contractor and used on the work shall be of such size and of such mechanical condition that the work can be performed in an acceptable manner at a satisfactory rate of progress and the quality of work produced will be satisfactory.

7.20.4.1 Equipment used on any portion of the project shall be such that no injury to the work, persons at or near the site, adjacent property or other objects will result from its use.

7.20.4.2 If the Contractor fails to provide adequate equipment for the work, the contract may be terminated as provided under Section 7.27 TERMINATION OF CONTRACT FOR CAUSE.

7.20.4.3 In the event that the Contractor furnishes and operates equipment on a force-account basis, it shall be operated to obtain maximum production under the prevailing conditions.

7.21 CONTRACT TIME

7.21.1 Time is of the essence for this contract.

7.21.2 Calculation of Contract Time - When the contract time is on a working day basis, the total contract time allowed for the performance of the work shall be the number of working days shown in the contract plus any additional working days authorized in writing as provided hereinafter. Refer to Article 1 DEFINITIONS for the definition of Working Day. The count of elapsed working days to be charged against contract time shall begin from the date of Notice to Proceed and shall continue consecutively to the date of Project Acceptance determined by the Engineer. When the contract completion time is a fixed calendar date, it shall be the date on which all work on the project shall be completed. Maintenance periods are not included within the contract time unless specifically noted in the Contract Documents.

7.21.3 Modifications of Contract Time
§3-125-4 HAR

7.21.3.1 Extensions - For increases in the scope for work caused by alterations and additional work made under Section 4.2 CHANGES, the Contractor will be granted a time extension only if the changes increase the time of performance for the Contract. If the Contractor believes that an extension of time is justified and is not adequately provided for in a Field Order, it must request the additional time sought in writing when the detailed cost breakdown required by Section 4.2 CHANGES, is submitted. The Contractor must show how the time of performance for the critical path will be affected and must also support the time extension request with schedules and statements from its subcontractors, suppliers, and/or manufacturers. Compensation for any altered or additional work will be paid as provided in Section 4.2 CHANGES.

7.21.3.2 The Department may direct changes to the work at any time until the work is finally accepted. The issuance of a Field Order at any time may alter or modify the contract duration only by the days specified therein; or if not specified therein, for the days the critical path must be extended for the change. Additional time to perform the extra work will be added to the time allowed in the contract without regard to the date the change directive was issued, even if the contract completion date has passed. A change requiring time will not constitute a waiver of pre-existing Contractor delay.

7.21.4 Delay for Permits - For delays beyond the control of the Contractor in obtaining necessary permits, one day extension for each day delay may be granted by the Engineer, provided the Contractor notifies the Engineer that the permits are not available, as soon as the delay occurs. Time extensions shall be the exclusive relief granted on account of such delays. No additional compensation will be paid for these time extensions.

7.21.5 Delays Beyond Contractor's Control
§3-125-18(4) - For delays affecting the critical path caused by acts of God, or the public enemy, fire, unusually severe weather, earthquakes, floods, epidemics, quarantine restrictions, labor disputes, freight embargoes and other reasons beyond the Contractor's

control, the Contractor may be granted an extension of time provided that:

7.21.5.1 The Contractor notifies the Engineer in writing within five (5) work days after the occurrence of the circumstances described above and states the possible effects on the completion date of the contract.

7.21.5.2 No time extension will be granted for weather conditions other than unusually severe weather occurrences, and floods.

7.21.5.3 The Contractor, if requested, submits to the Engineer within ten (10) work days after the request, a written statement describing the delay to the project. The extent of delay must be substantiated as follows:

(a) State specifically the reason or reasons for the delay and fully explain in a detailed chronology the effect of this delay to the work and/or the completion date.

(b) Submit copies of purchase order, delivery tag, and any other pertinent documentation to support the time extension request.

(c) Cite the period of delay and the time extension requested.

(d) A statement either that the above circumstances have been cleared and normal working conditions restored as of a certain day or that the above circumstances will continue to prevent completion of the project.

7.21.5.4 Time extensions shall be the exclusive relief granted and no additional compensation will be paid the Contractor for such delays.

7.21.6 Delays in Delivery of Materials - For delays in delivery of materials and / or equipment which occur as a result of unforeseeable causes beyond the control and without fault or negligence of both the Contractor, its subcontractor(s) or supplier(s), the Contractor may be granted an extension of time provided that it complies with the following procedures.

7.21.6.1 The Contractor must notify the Engineer in writing within five (5) consecutive working days after it first has any knowledge of delays or anticipated delays and state the effects such delays may have on the completion date of the contract.

7.21.6.2 The Contractor, if requested, must submit to the Engineer within ten (10) working days after a firm delivery date for the material and equipment is established, a written statement as to the delay to the progress of the project. The delay must be substantiated as follows:

(a) State specifically the reason or reasons for the delay. Explain in a detailed chronology the effect of this delay to the other work and / or the completion date.

(b) Submit copies of purchase order(s), factory invoice(s), bill(s) of lading, shipping manifest(s), delivery tag(s) and any other pertinent correspondence to support the time extension request.

(c) Cite the start and end date of the delay and the days requested therefore. The delay shall not exceed the difference between the originally scheduled delivery date versus the actual delivery date.

7.21.6.3 Time extensions shall be the exclusive relief granted and no additional compensation will be paid the Contractor on account of such delay.

7.21.7 Delays For Suspension of Work - Delay during periods of suspension of the work by the Engineer shall be computed as follows:

7.21.7.1 When the performance of the work is totally suspended for one or more days (calendar or working days, as appropriate) by order of the Engineer in accordance with paragraphs 7.24.1.1, 7.24.1.2, 7.24.1.4 or 7.24.1.6 the number of days from the effective date of the Engineer's order to suspend operations to the effective date of the Engineer's order to resume operations shall not be counted as contract time and the contract completion date will be adjusted. Should the Contractor claim for additional days in excess of the suspension period, Contractor shall provide evidence justifying the additional time. During periods of partial suspensions of the work, the Contractor will be granted a time extension only if the partial suspension affects the critical path. If the Contractor believes that an extension of time is justified for a partial suspension of work, it must request the extension in writing at least five (5) working days before the partial suspension will affect the critical operation(s) in progress. The Contractor must show how the critical path was increased based on the status of the work and must also support its claim, if requested, with statements from its subcontractors. A suspension of work will not constitute a waiver of pre-existing Contractor delay.

7.21.8 Contractor Caused Delays - No time extension will be considered for the following:

7.21.8.1 Delays in performing the work caused by the Contractor, subcontractor and / or supplier.

7.21.8.2 Delays in arrival of materials and equipment caused by the Contractor, subcontractor and / or supplier in ordering, fabricating, delivery, etc.

7.21.8.3 Delays requested for changes which the Engineer determines unjustifiable due to the lack of supporting evidence or because the change is not on the critical path.

7.21.8.4 Delays caused by the failure of the Contractor to submit for review and acceptance by the Engineer, on a timely basis, shop drawings, descriptive sheets, material samples, color samples, etc. except as covered in subsection 7.21.5 and 7.21.6.

7.21.8.5 Failure to follow the procedure within the time allowed to qualify for a time extension.

7.21.8.6 Days the Contractor is unable to work due to normal rainfall or other normal bad weather day conditions.

7.21.9 Reduction in Time - If the Department deletes any portion of the work, an appropriate reduction of contract time may be made in accordance with Section 4.2 CHANGES.

7.22 CONSTRUCTION SCHEDULE

7.22.1 The Contractor shall submit its detailed construction schedule to the Engineer prior to the start of the work. The purpose of the schedule is to allow the Engineer to monitor the Contractor's progress on the work. The schedule shall account for normal inclement weather, unusual soil or other conditions that may influence the progress of the work, schedules and coordination required by any utility, off or on site fabrications, and all other pertinent factors that relate to progress.

7.22.2 Submittal of and the Engineer's receipt of the construction schedule shall not imply the Department's approval of the schedule's breakdown, its individual elements, and any critical path that may be shown. Any acceptance or approval of the schedule 1) shall be for general format only and not for sequences or durations thereon, and 2) shall not be deemed an agreement by the Department that the construction means, methods and resources shown on the schedule will result in work that conforms to the contract requirements. The Contractor has the risk of all elements (whether or not shown) of the schedule and its execution. Additional compensation shall not be due the Contractor in the event that deviations from the Contractor's schedule, caused by any design revisions required to resolve site conditions or State, County, or utility requirements, affect the efficiency of its operations.

7.22.3 In the event the Contractor submits and the Department receives an accelerated schedule (shorter than the contract time), such will not constitute an agreement to modify the contract time or completion date, nor will the receipt, acceptance or approval of such a schedule incur any obligation by the Department.

7.22.4 Caution - The Department will not be responsible if the Contractor does not meet its accelerated schedule.

7.22.5 The requirements of this Section 7.22 CONSTRUCTION SCHEDULE may be waived by the Engineer.

7.23 STATEMENT OF WORKING DAYS - For all contracts on a working day basis, the Contractor will submit a statement of the number of working days for each month together with the Monthly Payment Application. The Monthly Payment Application will not be processed without the statement of working days.

7.24 SUSPENSION OF WORK §3-125-7 HAR

7.24.1 Procedure to be followed - The Engineer may, by written order, suspend the performance of the Work up to thirty (30) days and the Engineer, for an unlimited number of days, either in whole or in part for any cause, including but not limited to:

7.24.1.1 Weather or excess bad weather days, considered unsuitable by the Engineer for prosecution of the work; or

7.24.1.2 Soil Conditions considered unsuitable by the Engineer for prosecution of the work; or

7.24.1.3 Failure of the Contractor to:

(1) Correct conditions unsafe for the general public or for the workers;

(2) Carry out orders given by the Engineer;

(3) Perform the work in strict compliance with the provisions of the contract; or

(4) Provide a qualified Superintendent on the jobsite as described under Section 5.8 COOPERATION BETWEEN THE CONTRACTOR AND THE DEPARTMENT.

7.24.1.4 When any redesign is deemed necessary by the Engineer; or

7.24.1.5 Disturbance due to noise, odors or dust arising from the construction even if such disturbance does not

violate the section on Environmental Protection contained in the specifications; or

7.24.1.6 The convenience of the State.

7.24.2 Partial, Total Suspension of Work - Suspension of work on some but not all items of work shall be considered a partial suspension. Suspension of work on the entire work at the job site shall be considered total suspension. The period of suspension shall be computed as set forth in subsection 7.21.7 -Delays for Suspension of Work.

7.24.3 Payment §3-125-7 HAR

7.24.3.1 In the event that the Contractor is ordered by the Engineer in writing as provided herein to suspend all work under the contract in accordance with paragraphs 7.24.1.4 or 7.24.1.6, the Contractor may be reimbursed for actual direct costs incurred on work at the jobsite, as authorized in writing by the Engineer, including costs expended for the protection of the work. Payment for equipment which must standby during such suspension of work shall be made as described in clause 8.3.4.5. (e). No payment will be made for profit on any suspension costs. An allowance of five percent (5%) will be paid on any reimbursed actual costs for indirect categories of delay costs, including extended branch and home-office overhead and delay impact costs.

7.24.3.2 However, no adjustment to the contract amount or time shall be made under this Section 7.24 for any suspension, delay, or interruption:

(a) To the extent that performance would have been so suspended, delayed, or interrupted by any other cause, including the fault or negligence of the Contractor; or

(b) For which an adjustment is provided for or excluded under any other provision of this Contract.

7.24.3.3 Any adjustment in contract price made pursuant to this subsection shall be determined in accordance with this Section 7.24 and Section 4.2 CHANGES.

7.24.3.4 Claims for such compensation shall be filed with the Engineer within ten (10) calendar days after the date of the order to resume work or such claims will be waived by the Contractor. Together with the claim, the Contractor shall submit substantiating documents supporting the entire amount shown on the claim. The Engineer may make such investigations as are deemed necessary and shall be the sole judge of the claim and the Engineer's decision shall be final.

7.24.4 Claims Not Allowed - No claim under this Section 7.24 shall be allowed:

7.24.4.1 For any direct costs incurred more than twenty (20) days before the Contractor shall have notified the Engineer in writing of any suspension that the Contractor considered compensable. This requirement shall not apply as to a claim resulting from a suspension order under paragraphs 7.24.1.4 or 7.24.1.6, and

7.24.4.2 Unless the claim is asserted in writing within ten (10) calendar days after the termination of such suspension, delay, or interruption, but in no case not later than the date of final payment under the contract.

7.24.4.3 No provision of this Section 7.24 shall be construed as entitling the Contractor to compensation for delays due to failure of surety, for suspensions made at the request of the Contractor, for any delay required under the Contract, for partial suspension of work or for suspensions made by the Engineer under the provisions of paragraphs 7.24.1.1, 7.24.1.2, 7.24.1.3 and 7.24.1.5.

7.25 DISPUTES AND CLAIMS §3-126-31 HAR

7.25.1 Required Notification - As a condition precedent for any claim, the Contractor must give notice in writing to the Engineer in the manner and within the time periods stated in Section 4.2 CHANGES for claims for extra compensation, damages, or an extension of time due for one or more of the following reasons:

7.25.1.1 Requirements not clearly covered in the contract, or not ordered by the Engineer as an extra;
7.25.1.2 Failure by the State and Contractor to agree to an Oral Order or an adjustment in price or contract time for a Field Order or a Change Order issued by the State;

7.25.1.3 An action or omission by the Engineer requiring performance changes beyond the scope of the contract;

7.25.1.4 Failure of the State to issue a Field Order for controversies within the scope of Section 4.2 CHANGES.

7.25.1.5 For any other type of claim, the Contractor shall give notice within the time periods set forth in contract provisions pertaining to that event. If no specific contract provisions pertain to the claim, then the written notice of claim must be submitted within fifteen (15) days of the event giving rise to the claim.

7.25.2 Continued Performance of Work - The Contractor shall at all times continue with performance of the contract in full compliance with the directions of the Engineer. Continued performance by the Contractor shall not be deemed a waiver of any claim for additional compensation, damages, or an extension of time for

completion, provided that the written notice of claim is submitted in accordance with subsection 7.25.1

7.25.3 The requirement for timely written notice shall be a condition precedent to the assertion of a claim.

7.25.4 Requirements for Notice of Claim -The notice of claim shall clearly state the Contractor's intention to make claim and the reasons why the Contractor believes that additional compensation, changes or an extension of time may be remedies to which it is entitled. At a minimum, it shall provide the following:

7.25.4.1 Date of the protested order, decision or action;

7.25.4.2 The nature and circumstances which caused the claim;

7.25.4.3 The contract provision that support the claim;

7.25.4.4 The estimated dollar cost, if any, of the protested work and how that estimate was determined; and

7.25.4.5 An analysis of the progress schedule showing the schedule change or disruption if the Contractor is asserting a schedule change or disruption.

7.25.5 If the protest or claim is continuing, the information required in subsection 7.25.4 above shall be supplemented as requested by the Engineer.

7.25.6 Final Statement for Claim - The Contractor shall provide a final written statement of the actual adjustment in contract price and/or contract time requested for each notice of claim. Such statement shall clearly set forth that it is the final statement for that notice of claim. All such final statements shall be submitted within thirty (30) days after completion of the work that is the subject of the claim, but in no event no later than thirty (30) days after the Project Acceptance Date or the date of termination of the Contractor, whichever comes first.

7.25.7 All claims of any nature are barred if asserted after final payment under this contract has been made, except as provided under Section 8.9 CLAIMS ARISING OUT OF PAYMENT FOR REQUIRED WORK.

7.25.8 Contractor may protest the assessment or determination by the Engineer of amounts due the State from the Contractor by providing a written notice to the Engineer within thirty (30) days of the date of the Engineer's written assessment or determination. Said notice shall comply with all requirements of subsections 7.25.4 and 7.25.6 above. The requirement of such notice cannot be waived and it is a condition precedent to any claim by the Contractor. Failure to comply with these notice provisions constitutes a waiver of any claim.

7.25.9 In addition to the requirements of subsections 7.25.4, 7.25.6, and 7.25.8, all final written statements of claim shall be certified. This certification requirement applies to the Contractor without exception, including, but not limited to, situations involving "pass through" claims of subcontractors or suppliers. The certification must be executed by a person duly authorized to bind the Contractor with respect to the claim. The certification shall state as follows:

7.25.9.1 "I certify that the claim is made in good faith; that the supporting data are accurate and complete to the best of my knowledge and belief; that the amount requested accurately reflects the contract adjustment for which the Contractor believes the State is liable; and that I am duly authorized to certify the claim on behalf of the Contractor."

7.25.10 Decision on Claim / Appeal - The Contracting Officer shall decide all controversies between the State and the contractor which arise under, or are by virtue of, this contract and which are not resolved by mutual agreement. The decision of the Contracting Officer on the claim shall be final and conclusive, unless fraudulent or unless the contractor delivers to the Adjutant General a written appeal of the Contracting Officer's decision no later than 30 days after the date of the Contracting Officers decision. The Adjutant General's decision shall be final and conclusive, unless fraudulent or unless the contractor brings an action seeking judicial review of the Adjutant General's decision in an appropriate circuit court of this State within six months from the date of the Adjutant General's decision.

7.25.10.1 If the contractor delivers a written request for a final decision concerning the controversy, the Adjutant General shall issue a final decision within 90 days after receipt of such a request; provided that if the Adjutant General does not issue a written decision within 90 days or within such longer period as may be agreed upon by the parties, then the contractor may proceed as if an adverse decision had been received. Both parties to this contract agree that the period of up to 30 days to appeal the Contracting Officer's decision to the Adjutant General shall not be included in the 90 day period to issue a final decision.

7.25.11 Payment and Interest - The amount determined payable pursuant to the decision, less any portion already paid, normally should be paid without awaiting Contractor action concerning appeal. Such payments shall be without prejudice to the rights of either party. Interest on amounts ultimately determined to be due to a

Contractor shall be payable at the Statutory rate applicable to judgments against the State under Chapter 662, HRS from the date of receipt of a properly certified final written statement of actual adjustment required until the date of decision; except, however, that if an action is initiated in circuit court, interest under this Section 7.25 shall only be calculated until the time such action is initiated. Interest on amounts due the State from the Contractor shall be payable at the same rate from the date of issuance of the Engineer's notice to the Contractor. Where such payments are required to be returned by a subsequent decision, interest on such payments shall be paid at the statutory rate from the date of payment.

7.25.12 Contractor shall comply with any decision of the Engineer and proceed diligently with performance of this contract pending final resolution by a circuit court of this State of any controversy arising under, or by virtue of, this contract, except where there has been a material breach of contract by the State; provided that in any event the Contractor shall proceed diligently with the performance of the contract where the Engineer has made a written determination that continuation of work under the contract is essential to the public health and safety.

7.26 FAILURE TO COMPLETE THE WORK ON TIME

7.26.1 Completion of the work within the required time is important because delay in the prosecution of the work will inconvenience the public and interfere with the State's business. In addition, the State will be damaged by the inability to obtain full use of the completed work and by increased engineering, inspection, superintendence, and administrative services in connection with the work. Furthermore, delay may detrimentally impact the financing, planning, or completion of other State projects because of the need to devote State resources to the project after the required completion date. The monetary
amount of such public inconvenience, interference with State business, and damages, is difficult, if not impossible, to accurately determine and precisely prove. Therefore, it is hereby agreed that the amount of such damages shall be the appropriate sum of liquidated damages as set forth below.

7.26.1.1 When the Contractor fails to complete the Work or any portion of the Work within the time or times fixed in the contract or any extension thereof, it is agreed the Contractor shall pay liquidated damages to the Department based upon the amount stated in the Offer form.

7.26.1.2 If the Contractor fails to correct Punch list deficiencies as required by Section 7.32 PROJECT ACCEPTANCE DATE, the State will be inconvenienced and damaged, therefore, it is agreed that the Contractor shall pay liquidated damages to the Department based upon the amount stated in the Offer Form. Liquidated damages shall accrue for all days after the Contract Completion Date or ay extension thereof until the date the Punchlist items are corrected and accepted by the Engineer.

7.26.1.3 If the Contractor fails to submit final documents as required by Section 7.33 FINAL SETTLEMENT OF THE CONTRACT, the State will be inconvenienced and damaged, therefore, it is agreed that the Contractor shall pay liquidated damages to the Department based upon the amount stated in the Offer Form. Liquidated damages shall accrue for all days after the Contract Completion Date or any extension thereof, until the date the final documents are received by the Engineer.

7.26.1.4 The Engineer shall assess the total amount of liquidated damages in accordance with the amount stated in the Offer Form and provide written notice of such assessment to the Contractor.

7.26.2 Acceptance of Liquidated Damages -The assessment of liquidated damages by the Engineer shall be accepted by the parties hereto as final, unless the Contractor delivers a written appeal of the Engineer's decision in accordance with subsection 7.25.10 requirements. Any allowance of time or remission of charges or liquidated damages shall in no other manner affect the rights or obligations of the parties under this contract nor be construed to prevent action under Section 7.27 TERMINATION OF CONTRACT FOR CAUSE. If the Department terminates the Contractor's right to proceed, the resulting damage will include such liquidated damages for such time as may be required for final completion of the work after the required contract completion date.

7.26.3 Payments for Liquidated Damages -Liquidated damages shall be deducted from monies due or that may become due to the Contractor under the contract or from other monies that may be due or become due to the Contractor from the State.

7.27 TERMINATION OF CONTRACT FOR CAUSE §3-125-18 HAR

7.27.1 Default - If the Contractor refuses or fails to perform the work, or any separable part thereof, with such diligence as will assure its completion within the time specified in this contract, or any extension thereof, fails to complete the work within such time, or commits

any other material breach of this contract, and further fails within seven (7) days after receipt of written notice from the Engineer to commence and continue correction of the refusal or failure with diligence and promptness, the Engineer may, by written notice to the Contractor, declare the Contractor in breach and terminate the Contractor's right to proceed with the work or the part of the work as to which there has been delay or other breach of contract. In such event, the Department may take over the work and perform the same to completion, by contract or otherwise, and may take possession of, and utilize in completing the work, the materials, appliances, and plant as may be on the site of the work and necessary therefore. Whether or not the Contractor's right to proceed with the work is terminated, the Contractor and the Contractor's sureties shall be liable for any damage to the Department resulting from the Contractor's refusal or failure to complete the work within the specified time.

7.27.2 Additional Rights and Remedies - The rights and remedies of the Department provided in this contract are in addition to any other rights and remedies provided by law.

7.27.3 Costs and Charges

7.27.3.1 All costs and charges incurred by the Department, together with the cost of completing the work under contract, will be deducted from any monies due or which would or might have become due to the Contractor had it been allowed to complete the work under the contract. If such expense exceeds the sum which would have been payable under the contract, then the Contractor and the surety shall be liable and shall pay the Department the amount of the excess.

7.27.3.2 In case of termination, the Engineer shall limit any payment to the Contractor to the part of the contract satisfactorily completed at the time of termination. Payment will not be made until the work
has satisfactorily been completed and the tax clearance required by Section 8.8 FINAL PAYMENT is submitted by the Contractor. Termination shall not relieve the Contractor or Surety from liability for performance liquidated damages.

7.27.4 Erroneous Termination for Cause - If, after notice of termination of the Contractor's right to proceed under this Section 7.27, it is determined for any reason that good cause did not exist to allow the Department to terminate as provided herein, the rights and obligations of the parties shall be the same as, and the relief afforded the Contractor shall be limited to, the provisions contained in Section 7.28 TERMINATION FOR CONVENIENCE.

7.28 TERMINATION FOR CONVENIENCE

§3-125-22 HAR

7.28.1 Termination - The Engineer may, when the interests of the State so require, terminate this contract in whole or in part, for the convenience of the State. The Engineer shall give written notice of the termination to the Contractor specifying the part of the contract terminated and when termination becomes effective.

7.28.2 Contractor's Obligations - The Contractor shall incur no further obligations in connection with the terminated work and on the date set in the notice of termination the Contractor will stop work to the extent specified. The Contractor shall also terminate outstanding orders and subcontracts as they relate to the terminated work. The Contractor shall settle the liabilities and claims arising out of the termination of subcontracts and orders connected with the terminated work subject to the State's approval. The Engineer may direct the Contractor to assign the Contractor's right, title, and interest under terminated orders or subcontracts to the State. The Contractor must still complete the work not terminated by the notice of termination.

7.28.3 Right to Construction and Goods - The Engineer may require the Contractor to transfer title and delivery to the State in the manner and to the extent directed by the Engineer, the following:

7.28.3.1 Any completed work; and

7.28.3.2 Any partially completed construction, goods, materials, parts, tools, dies, jigs, fixtures, drawings, information, and contract rights (hereinafter called "construction material") that the Contractor has specifically produced or specially acquired for the performance of the terminated part of this contract.

7.28.3.3 The Contractor shall protect and preserve all property in the possession of the Contractor in which the State has an interest. If the Engineer does not elect to retain any such property, the Contractor shall use its best efforts to sell such property and construction material for the Department's account in accordance with the standards of section 490:2-706, HRS.

7.28.4 Compensation

7.28.4.1 Contractor shall submit a termination claim specifying the amounts due because of the termination for convenience together with cost or pricing data, submitted to the extent required by subchapter 15, chapter 3-122, HAR. If the Contractor fails to file a termination claim within one year from the effective date of termination, the Engineer may pay the Contractor, if at all, an amount set in accordance with paragraph 7.28.4.3.

7.28.4.2 The Engineer and the Contractor may agree to a settlement provided the Contractor has filed a termination claim supported by cost or pricing data submitted as required and that the settlement does not exceed the total contract price plus settlement costs reduced by payments previously made by the State, the proceeds of any sales of construction, supplies, and construction materials under paragraph 7.28.3.3 of this Section, and the contract price of the work not terminated.

7.28.4.3 Absent complete agreement, the Engineer shall pay the Contractor the following amounts, less any payments previously made under the contract.

(a) The cost of all contract work performed prior to the effective date of the notice of termination work plus a five percent (5%) markup on the actual direct costs, including amounts paid to subcontractor, less amounts previously paid or to be paid for completed portions of such work; provided, however, that if it appears that the Contractor would have sustained a loss if the entire contract would have been completed, no markup shall be allowed or included and the amount of compensation shall be reduced to reflect the anticipated rate of loss. No anticipated profit or consequential damage will be due or paid.

(b) Subcontractors shall be paid a markup of ten percent (10%) on their direct job costs incurred to the date of termination. No anticipated profit or consequential damage will be due or paid to any subcontractor. These costs must not include payments made to the Contractor for subcontract work during the contract period.

(c) In any case, the total sum to be paid the Contractor shall not exceed the total contract price reduced by the amount of any sales of construction supplies, and construction materials.

7.28.4.4 Costs claimed, agreed to, or established by the State shall be in accordance with chapter 3-123, HAR.

7.29 CORRECTING DEFECTS - If the Contractor fails to commence to correct any defects of any nature, within ten (10) working days after the correction thereof has been requested in writing by the State, and thereafter to expeditiously complete the correction of said defects, the Engineer may without further notice to the Contractor or surety and without termination of contract, correct the defects and deduct the cost thereof from the contract price.

7.30 FINAL CLEANING - Before final inspection of the work, the Contractor shall clean all ground occupied by the Contractor in connection with the Work of all rubbish, excess materials, temporary structures and equipment, and all parts of the work must be left in a neat and presentable condition to the satisfaction of the Engineer. However, the Contractor shall not remove any warning and directional signs prior to the formal acceptance by the Engineer. Full compensation for final cleaning will be included in the prices paid for the various items of work or lump sum bid, as the case may be, and no separate payment will be made therefore.

7.31 SUBSTANTIAL COMPLETION, AND FINAL INSPECTION - Before the Department accepts the project as being completed, unless otherwise stipulated by the Engineer, the following procedure shall be followed:

7.31.1 Substantial Completion:

7.31.1.1 The Contractor and its subcontractors shall inspect the project to confirm whether the Project is Substantially Complete. This inspection effort shall include the testing of all equipment and providing a Punch list that identifies deficiencies which must be corrected. Contractor shall make the corrections and if required repeat the procedure. Also, the Contractor shall schedule final Building, Plumbing, Electrical, Elevator, Fire and other required inspections and obtain final approvals.

(a) When in compliance with the above requirements, the Contractor shall notify the Engineer in writing that project is Substantially Complete and ready for a Final Inspection. Along with the Substantial Completion notification, the Contractor shall provide its Punch list(s) with the status of the deficiencies and dates when the deficiencies were corrected. The Project Inspector and / or the Engineer shall make a preliminary determination whether project is Substantially Complete.

(b) If the Project is not Substantially Complete, the Engineer shall inform the Contractor. The Contractor shall identify deficiencies which must be corrected, update its Punch list, make the necessary corrections and repeat the previous step. After completing the necessary work, the Contractor shall notify the Engineer in writing that Punch list deficiencies have been corrected and the project is ready for a Final Inspection.

(c) If the Project is Substantially Complete, the Engineer shall schedule a Final Inspection within fifteen (15) days of the Contractor's notification letter or as otherwise determined by the Engineer.

7.31.1.2 In addition, and to facilitate closing of the project, the Contractor shall also proceed to obtain the following closing documents (where applicable) prior to the Final Inspection:

(1) Field-Posted As-Built Drawings.

(2) Maintenance Service Contract and two (2) copies of a list of all equipment.

(3) Operating and maintenance manuals.

(4) Air conditioning test and balance reports.

(5) Any other final submittal required by the technical sections of the contract.

7.31.2 Final Inspection: If at the Final Inspection the Engineer determines that all work is completed, the Engineer shall notify the Contractor in accordance with Section 7.32 PROJECT ACCEPTANCE DATE. Should there be remaining deficiencies which must be corrected, the Contractor shall provide an updated Punch list to the Engineer, within five (5) days from the Final Inspection Date. The Contractor shall make the necessary corrections.

7.31.2.1 The Engineer shall confirm the list of deficiencies noted by the Contractor's punch list(s) and will notify the Contractor of any other deficiencies that must be corrected before final settlement.

7.31.3 The Engineer may add to or otherwise modify the Punch list from time to time. The Contractor shall take immediate action to correct the deficiencies.

7.31.4 Revoking Substantial Completion - At any time before final Project Acceptance is issued, the Engineer may revoke the determination of Substantial Completion if the Engineer finds it was not warranted. The Engineer shall notify the Contractor in writing with the reasons and outstanding deficiencies negating the declaration. Once notified, the Contractor shall make the necessary corrections and repeat the required steps noted in subsections 7.31.1 and 7.31.2.

7.32 PROJECT ACCEPTANCE DATE

7.32.1 If upon Final Inspection, the Engineer finds that the project has been satisfactorily completed in compliance with the contract, the Engineer shall declare the project completed and accepted and will notify the Contractor in writing of the acceptance by way of the Project Acceptance Notice.

7.32.2 Protection and Maintenance - After the Project Acceptance Date, the Contractor shall be relieved of maintaining and protecting the work EXCEPT that this does not hold true for those portions of the work which have not been accepted, including Punch list deficiencies. The State shall be responsible for the protection and maintenance of the accepted facility.

7.32.3 The date of Project Acceptance shall determine:

7.32.3.1 End of Contract Time.

7.32.3.2 Commencement of all guaranty periods except as noted in Section 7.34 CONTRACTOR'S RESPONSIBILITY FOR WORK: RISK OF LOSS.

7.32.3.3 Commencement of all maintenance services except as noted in Section 7.34 CONTRACTOR'S RESPONSIBILITY FOR WORK: RISK OF LOSS.

7.32.4 Punch list Requirements - If a Punch list is required under Section 7.31 SUBSTANTIAL COMPLETION AND FINAL INSPECTION, the Project Acceptance Notice will include the Engineer's Punch list and the date when correction of the deficiencies must be completed.

7.32.4.1 Punch list corrective work shall be completed prior to Contract Completion Date, or extension thereof.

7.32.5 Upon receiving the Punch list, the Contractor shall promptly devote the required time, labor, equipment, materials and incidentals necessary to correct the deficiencies expeditiously.

7.32.6 For those items of work that cannot be completed by the established date, the Contractor shall submit a schedule in writing to the Engineer for approval along with documentation to justify the time required, no later than five (5) working days before the date stipulated for completion of the Punch list work. A Proposed schedule submitted after the five (5) day period will not be considered.

7.32.7 Failure to Correct Deficiencies - If the Contractor fails to correct the deficiencies within the time established in paragraph 7.32.4.1, the Contracting Officer shall assess liquidated damages as required by Section 7.26 - FAILURE TO COMPLETE THE WORK ON TIME.

7.32.8 If the Contractor fails to correct the deficiencies and complete the work by the established or agreed to date, the State also reserves the right to correct the deficiencies by whatever method it deems necessary and deduct the cost from the final payment due the contractor.

7.32.9 The Contractor may further be prohibited from bidding in accordance with Section 2.12 - DISQUALIFICATION OF BIDDERS. In addition, assessment of damages shall not prevent action under

Section 7.27 - TERMINATION OF CONTRACT FOR CAUSE.

7.33 FINAL SETTLEMENT OF CONTRACT - The contract will be considered settled after the project acceptance date and when the following items have been satisfactorily submitted, where applicable:

7.33.1 Necessary Submissions in addition to the items noted under paragraph 7.31.1.2.

7.33.1.1 All written guarantees required by the contract.

7.33.1.2 Complete and certified weekly payrolls for the Contractor and its Subcontractor(s).

7.33.1.3 Certificate of Plumbing and Electrical Inspection.

7.33.1.4 Certificate of Building Occupancy.

7.33.1.5 Certificates for Soil Treatment and Wood Treatment.

7.33.1.6 Certificate of Water System Chlorination.

7.33.1.7 Certificate of Elevator Inspection, Boiler and Pressure Pipe installation.

7.33.1.8 All other documents required by the Contract.

7.33.2 Failure to Submit Closing Documents - The Contractor shall submit the final Payment Application and the above applicable closing documents within sixty (60)
days from the date of Project Acceptance or the agreed to Punch list completion date. Should the Contractor fail to comply with these requirements, the Engineer may terminate the Contract for cause. The pertinent provisions of Section 7.27 TERMINATION OF CONTRACT FOR CAUSE shall be applicable.

7.33.3 In addition, should the Contractor fail to furnish final closing documents within the required time period, the Engineer shall assess performance liquidated damages as required by Section 7.26 FAILURE TO COMPLETE THE WORK ON TIME.

7.34 CONTRACTOR'S RESPONSIBILITY FOR WORK; RISK OF LOSS

7.34.1 Until the establishment of the Project Acceptance Date or Beneficial Occupancy whichever is sooner, the Contractor shall take every necessary precaution against injury or damage to any part of the work caused by the perils insured by an All Risk policy excluding earthquakes and floods, whether arising from the execution or from the non-execution of the work. The Contractor shall rebuild, repair, restore and make good all injuries or damage to any portion of the work occasioned by the perils insured by an All Risk policy before the date of final acceptance and shall bear the risk and expense thereof.

7.34.2 After the Project Acceptance Date or Beneficial Occupancy whichever is sooner, the Contractor shall be relieved of maintaining and protecting the work except for those portions of the work which have not been accepted including Punch list deficiencies.

7.34.3 The risk of damage to the work from any hazard or occurrence that may be covered by a required Property Insurance policy is that of the Contractor, unless such risk of loss is placed elsewhere by express language in the contract documents. No claims for any loss or damage shall be recognized by the Department, nor will any such loss or damage excuse the complete and satisfactory performance of the contract by the Contractor.

7.35 GUARANTEE OF WORK

7.35.1 In addition to any required manufacturers warranties, all work and equipment shall be guaranteed by the Contractor against defects in materials, equipment or workmanship for one year from the Project Acceptance Date or as otherwise specified in the Contract Documents, whichever is earlier.

7.35.2 Repair of Work - If, within any guarantee period, repairs or changes are required in connection with the guaranteed work, which in the opinion of the Engineer is necessary due to materials, equipment or workmanship which are inferior, defective or not in accordance with the terms of the Contract, the Contractor shall within five (5) working days and without expense to the Department commence to:

7.35.2.1 Place in satisfactory condition in every instance all such guaranteed work and correct all defects therein; and

7.35.2.2 Make good and repair or replace to new or pre-existing condition all damages to the building, facility, work or equipment or contents thereof, resulting from such defective materials, equipment or installation thereof.

7.35.3 Manufacturer's and Installer's Guarantee- Whenever a manufacturer's or installer's guarantee on any product specified in the respective Specification sections, exceeds one year, this guarantee shall become part of this contract in addition to the Contractor's guarantee. Contractor shall complete the guarantee forms in the name of the Department and submit such

forms to the manufacturer within such time required to validate the guarantee. Contractor shall submit to the Department a photocopy of the completed guarantee form for the Department's record as evidence that such guarantee form was executed by the manufacturer.

7.35.4 If a defect is discovered during a guarantee period, all repairs and corrections to the defective items when corrected shall again be guaranteed for the original full guarantee period. The guarantee period shall be tolled and suspended for all work affected by the defect. The guarantee period for work affected by the defect shall restart for its remaining duration upon confirmation by the Engineer that the deficiencies have been repaired or remedied.

7.35.5 If guarantee is specified for greater than two (2) years, two (2) years shall prevail except for manufacturer's warranties. Manufacturer's warranties shall remain as specified in their respective Specification sections.

7.35.5.1 However, the number of years specified in the technical specifications shall prevail only if it is stated that the number of years for guarantee supersedes this provision.

7.36 WORK OF AND CHARGES BY UTILITIES

7.36.1 The Contractor shall be responsible for scheduling and coordinating the work with the utility companies and applicable Governmental agencies for permanent service installation and connections or modifications to existing utilities. The Contractor shall make available all portions of the work necessary for the Utility companies to do their work. The Department shall not bear the risk of any damage to the contract work caused by any utility company, and work of repairing such damage and delay costs must be resolved between the Contractor and the utility company and their insurers.

7.36.2 Unless stated as an allowance item to be paid by the Contractor, the Department will pay the utility companies and applicable governmental agencies directly for necessary modifications and connections. Contractor charges for overhead, supervision, coordination, profit, insurance and any other incidental expenses shall be included in the Contractor's Bid whether the utility is paid directly by the Department or by an allowance item in the Contract.

7.37 RIGHT TO AUDIT RECORDS

7.37.1 Pursuant to Section 103D-317 HRS the State, at reasonable times and places, may audit the books and records of a Contractor, prospective contractor, subcontractor and prospective subcontractor relating to the Contractor's or subcontractor's cost or pricing data. The books and records shall be maintained by the Contractor and subcontractor(s) for a period of four (4) years from the date of final payment under the contract.

7.37.2 The Contractor shall insure that its subcontractors comply with this requirement and shall bear all costs (including attorney's fees) of enforcement in the event of its subcontractor's failure or refusal to fully cooperate.

7.37.3 Additionally, Sections 231-7, 235-108, 237-39 and other HRS chapters through reference, authorizes the Department of Taxation to audit all taxpayers conducting business within the State. Contractors must make available to the Department of Taxation all books and records necessary to verify compliance with the tax laws.

7.38 RECORDS MAINTENANCE, RETENTION AND ACCESS

7.38.1 The Contractor and any subcontractor whose contract for services is valued at $25,000 or more shall, in accordance with generally acceptable accounting practices, maintain fiscal records and supporting documents and related files, papers, and reports that adequately reflect all direct and indirect expenditures and management and fiscal practices related to the Contractor and subcontractor's performance of services under this Agreement.

7.38.2 The representative of the Department, the Adjutant General of the State of Hawaii, the Attorney General, (the Federal granting agency, the Comptroller General of the United States, and any of their authorized representatives when federal funds are utilized), and the Legislative Auditor of the State of Hawaii shall have the right of access to any book, document, paper, file, or other record of the Contractor and any subcontractor that is related to the performance of services under this Agreement in order to conduct an audit or other examination and / or to make copies, excerpts and transcripts for the purposes of monitoring and evaluating the Contractor and subcontractor's performance of services and the Contractor and subcontractor's program, management, and fiscal practices to assure the proper and effective expenditure of funds and to verify all costs associated with any claims made under this Agreement.

7.38.3 The right of access shall not be limited to the required retention period but shall last as long as the records are retained. The Contractor and subcontractor shall retain all records related to the Contractor and subcontractor's performance of services under this Agreement for four (4) years from the date of final

payment, except that if any litigation, claim, negotiation, investigation, audit or other action involving the records has been started before the expiration of the four (4) year period, the Contractor and subcontractors shall retain the records until completion of the action and resolution of all issues that arise from it, or until the end of the four (4)) year retention period, whichever occurs later. Furthermore, it shall be the Contractor's responsibility to enforce compliance with this provision by any subcontractor.

ARTICLE 8 - Measurement and Payment

8.1 MEASUREMENT OF QUANTITIES

8.1.1 All work completed under the Contract shall be measured by the Engineer according to United States standard measures, or as stated in this Contract. The method of measurement and computations to be used in determination of quantities of material furnished and of work performed under the contract shall conform to good engineering practice. These measurements shall be considered correct and final unless the Contractor has protested same to the Engineer and has demonstrated the existence of an error by actual physical measurement before the work has progressed in a manner which would prohibit a proper check.

8.1.2 All measurements of the area of the various surface, pavement and base courses will be made in the horizontal projection of the actual surface and no deductions will be made for fixtures or structures having an area of nine (9) square feet or less. All measurements of headers, curbs, fences and any other type of construction which is to be paid for by its length, will be made in the horizontal projection of the actual driven length from toe to top of cutoff, except where slope exceeds ten percent (10%) and for piles, which will be by actual length. All materials which are specified for measurement by the cubic yard "Loose Measurement" or "Measured in the Vehicle" shall be hauled in approved vehicles and measured therein at the point of delivery. Approved vehicles for this purpose may be of any type or size satisfactory to the Engineer, provided that the body is of such type that the actual contents may be readily and accurately determined. Unless all approved vehicles on a job are of a uniform capacity each approved vehicle must bear a plainly legible identification mark indicating the specific approved capacity. The Inspector may reject all loads not hauled in such approved vehicles.

8.2 NO WAIVER OF LEGAL RIGHTS - The Engineer shall not be precluded or estopped by any measurements, estimate or certificate made either before or after the completion and acceptance of the work and payment therefore, from showing the true amount and character of the work performed and materials furnished by the Contractor, or from showing that any such measurement estimate or certificate is untrue or incorrectly made, or rejecting the work or materials that do not conform in fact to the contract. The Engineer shall not be precluded or estopped, notwithstanding any such measurement, estimate, or certificate and payment in accordance therewith, from recovering from the Contractor and its sureties such damages as the Department may sustain by reason of the Contractor's failure to comply with the terms of the contract. Neither the acceptance by the Engineer or any representative of the Engineer, nor any payment for or acceptance of the whole or any part of the work, nor any extension of time, or any possession taken by the Engineer, shall operate as a waiver of any portion of the contract, or of any power herein reserved, or any right to damage herein provided. A waiver of any notice requirement or breach of the contract shall not be held to be a waiver of any other notice requirement or subsequent breach.

8.3 PAYMENT FOR ADDITIONAL WORK

8.3.1 Payment for Changed Conditions – A contract modification or change order complying with section 4.4 PRICE ADJUSTMENT and section 4.5 ALLOWANCES FOR OVERHEAD AND PROFIT shall be issued for all changes that are directed under Section 4.2 CHANGES. No payment for any change including work performed under the force account provisions will be made until a change order is issued or contract modification is executed.

8.3.1.1 At the completion of the force account work or at an intermediate interval approved by the Engineer, the contractor shall submit its force account cost proposal, including; approved daily force account records with any attached invoices or receipt, to the Engineer for processing a contract modification or change order.

8.3.2 On credit proposals and proposals covering both increases and decreases, the application of overhead and profit shall be on the net change in direct costs for the performance of the work.

8.3.3 When payment is to be made for additional work directed by a field order, the total price adjustment as specified in the field order or if not specified therein for the work contained in the related change order shall be considered full compensation for all materials, labor, insurance, taxes, equipment use or rental and overheads, both field and home office including extended home and branch office overhead and other related delay impact costs.

8.3.4 Force Account Method - When, for the convenience of the Department, payment is to be made

by the Force Account method, all work performed or labor and materials and equipment furnished shall be paid for as described below. Payment by the Force Account method will not alter any rights, duties and obligations under the contract.

8.3.4.1 Labor - For all hourly workers, the Contractor will receive the rate of wage including fringe benefits when such amounts are required by collective bargaining agreement or other employment contract generally applicable to the classes of labor employed on the work, which shall be agreed upon in writing before beginning work for each and every hour that said labor is actually engaged in said work.

(a) All markups for overhead and profit shall be added subject to limitations established in Section 4.5 ALLOWANCES FOR OVERHEAD AND PROFIT.

(b) No allowance for overtime compensation will be given without the written approval of the Engineer prior to performance of such work.

8.3.4.2 Insurance and Taxes - The Contractor and subcontractor(s) will also receive the actual additional costs paid for property damage, liability, workers compensation insurance premiums, State unemployment contributions, Federal unemployment taxes, social security and Medicare taxes to which a markup of up to six percent (6%) may be added.

8.3.4.3 Materials - For materials accepted by the Engineer and used, the Contractor and subcontractor(s) shall receive the actual cost of such materials delivered and incorporated into work, plus a markup allowed under Section 4.5 ALLOWANCES FOR OVERHEAD AND PROFIT.

8.3.4.4 Subcontractors - Subcontractor costs shall be the actual costs of the subcontractor marked up as defined in this Section 8.3 plus a markup allowed under Section 4.5 ALLOWANCES FOR OVERHEAD AND PROFIT.

8.3.4.5 Equipment

(1) For machinery or special equipment (other than small tools as herein defined in clause 8.3.4.5.(h) owned or leased by the Contractor or a related entity, the use of which has been authorized by the Engineer:

(a.) The Contractor will be paid at the per-hour rental rates based on the monthly rate established for said machinery or equipment in the then-current edition of the Rental Rate Blue Book for Construction Equipment including the estimated operating cost per hour and regional correction provided therein.

(b.) If no rate is listed for a particular kind, type or size of machinery or equipment, then the monthly, hourly rates shall be as agreed upon in writing by the Contractor and the Engineer prior to the use of said machinery or equipment. If there is no agreement, the Engineer will set a rate. The Contractor may contest the rate pursuant to Section 7.25 DISPUTES AND CLAIMS.

(c.) Rental rates which are higher than those specified in the aforesaid Rental Rate Blue Book publication may be allowed where such higher rates can be justified by job conditions such as work in water and work on lava, etc. Request for such higher rates shall be submitted in writing to the Engineer for approval prior to the use of the machinery or equipment in question.

(2) For machinery or special equipment (other than small tools as herein defined in clause 8.3.4.5.(h) rented by the Contractor or a related entity specifically for the Force Account work, the use of which has been authorized by the Engineer; The Contractor will be paid the actual rental cost for the machinery or equipment, including mobilization and demobilization costs. A receipt from the equipment supplier shall be submitted to the Engineer.

(3) For machinery or special equipment (other than small tools as herein defined in clause 8.3.4.5. (h) rented by the Contractor or a related entity for use in the project, but which will also be used for the Force Account work, the use of which has been authorized by the Engineer; The Contractor will be paid the actual rental cost for the machinery or equipment. No additional mobilization and demobilization costs will be paid. A receipt from the equipment supplier shall be submitted to the Engineer.

(4) The rental rate for trucks not owned by the Contractor shall be those as established under the Hawaii State Public Utilities Commission, which will be paid for as an equipment item pursuant to paragraph 8.3.4.5. Rental rates for Contractor-owned trucks not listed in the Rental Rate Blue Book shall be agreed upon in writing by the Contractor and Engineer prior to the use of said trucks. If there is no agreement, the Engineer shall set the rate. The Contractor may contest the rate

pursuant to Section 7.25 DISPUTES AND CLAIMS.

(5) The rental period shall begin at the time equipment reaches the site of work, shall include each day that the machinery or equipment is at the site of the work and shall terminate at the end of the day on which the equipment is no longer needed. In the event the equipment must standby due to work being delayed or halted by reason of design, traffic, or other related problems uncontrollable by the Contractor, excluding Saturdays, Sundays and Legal Holidays, unless the equipment is used to perform work on such days, the rental shall be two hours per day until the equipment is no longer needed.

(5.1) The rental time to be paid will be for the time actually used. Any hours or operation in excess of 8 hours in any one day must be approved by the Engineer prior to the performance of such work.

(5.2) Rental time will not be allowed or credited for any day on which machinery or equipment is inoperative due to its breakdown. On such days, the Contractor will be paid only for the actual hours, if any, that the machinery or equipment was in operation.

(5.3) In the event the Force Account work is completed in less than 8 hours, equipment rental shall nevertheless be paid for a minimum 8 hours.

(5.4) For the purpose of determining the rental period the continuous and consecutive days shall be the normal 8-hour shift work day, Monday through Friday excluding legal holidays. Any work day to be paid less than 8 hours shall not be considered as continuous, except for equipment removed from rental for fuel and lubrication.

(5.5) No additional premium beyond the normal rates used will be paid for equipment over 8 hours per day or 40 hours per week.

(6) All rental rates for machinery and equipment shall include the cost of fuel, oil, lubricants, supplies, small tools, necessary attachments, repairs, maintenance, tire wear, depreciation, storage, and all other incidentals.

(7) All machinery and equipment shall be in good working condition and suitable for the purpose for which the machinery and equipment is to be used.

(8) Individual pieces of equipment or tools having a replacement value of one thousand dollars ($1,000) or less, whether or not consumed by use, shall be considered to be small tools and included in the allowed markup for overhead and profit and no separate payment will be made therefore.

(9) The total of all Force Account rental charges accrued over the duration of the contract for a specific item of equipment shall not exceed the replacement cost of that equipment.

(9.1) The Contractor shall provide the cost of replacement to the Engineer prior to using the equipment. If the Engineer does not agree with the replacement cost, the Engineer shall set the replacement cost. The Contractor may contest the replacement cost pursuant to Section 7.25 DISPUTES AND CLAIMS.

(10) Should the item of equipment be rented from an unrelated entity, the rental cost will be treated as an equipment cost under paragraph 8.3.4.5.

(11) Transportation and/or Mobilization: The following provisions shall govern in determining the compensation to be paid to the Contractor for use of equipment or machinery on the Force Account method:

(11.1) The location from which the equipment is to be moved or transported shall be approved by the Engineer.

(11.2) Where the equipment must be transported to the site of the force account work, the Department will pay the reasonable cost of mobilizing and transporting the equipment, including its loading and unloading, from its original location to the site of force account work. Upon completion of the work the Department will pay the reasonable cost of mobilizing and transporting the equipment back to its original location or to another location, whichever cost is less.

(11.3) The cost of transporting the equipment shall not exceed the rates established by the Hawaii State Public Utilities Commission. If such rates are nonexistent, then the rates will be determined by the Engineer based upon the prevailing rates charged by established haulers within the locale.

(11.4) Where the equipment is self-propelled, the Department will pay the cost of moving the equipment by its own power from its original location to the site of the force account work. Upon completion of the work the Department will pay the reasonable cost of moving of the Equipment back to its original or another location, whichever cost is less.

(11.5) At the discretion of the Engineer, when the Contractor desires to use such equipment for other than Force Account work, the costs of mobilization and transportation shall be prorated between the Force Account and non Force Account work.

(l2) Pickup trucks, vans, storage trailers, unless specifically rented for the Force Account work, shall be considered incidental to the Force Account work and the costs therefore are included in the markup allowed under Section 4.5 ALLOWANCES FOR OVERHEAD AND PROFIT.

8.3.4.6 State Excise (Gross Income) Tax and Bond - A sum equal to the current percentage rate for the State excise (Gross Income) tax on the total sum determined in paragraphs 8.3.4.1, 8.3.4.2, 8.3.4.3 and 8.3.4.4 above, and the bond premium shall be added as compensation to the Contractor. The actual bond premium not to exceed one percent (1%) shall be added to items covered by paragraphs 8.3.4.1, 8.3.4.2, 8.3.4.3 and 8.3.4.4 when applicable.

(1) The compensation as determined in paragraphs 8.3.4.1, 8.3.4.2, 8.3.4.3, 8.3.4.4 and 8.3.4.5 above shall be deemed to be payment in full for work paid on a force account basis.

8.3.4.7 Records - The Contractor and the Engineer shall compare records of the labor, materials and equipment rentals paid by the Force Account basis at the end of each day. These daily records, if signed by both parties, shall thereafter be the basis for the quantities to be paid for by the Force Account method. The Contractor shall not be entitled to payment for Force Account records not signed by the Engineer.

8.3.4.8 Statements - No payment will be made for work on a Force Account basis until the Contractor has submitted to the Engineer, duplicate itemized statements of the cost of such Force Account work detailed as follows:

(a) Laborers - Name, classification, date, daily hours, total hours, rate, and extension for each laborer and foreman and also the amount of fringe benefits payable if any.

(b) Equipment - Designation, dates, daily hours, total hours, rental rate, and extension for each unit of machinery and equipment.

(c) Materials

(c.1) Quantities of materials, prices and extensions

(c.2) Costs of transporting materials, if such cost is not reflected in the prices of the materials.

(c.3) Statements shall be accompanied and supported by receipted invoices for all materials used and transportation charges. However, if materials used on the Force Account work are not specifically purchased for such work but are taken from the Contractor's stock, then in lieu of the invoices the Contractors shall submit an affidavit certifying that such materials were taken from stock and that the amount claimed represents the actual cost to the Contractor.

(d) Insurance - Cost of property damage, liability and worker's compensation insurance premiums, unemployment insurance contributions, and social security tax.

8.4 PROGRESS AND / OR PARTIAL PAYMENTS

8.4.1 Progress Payments - The Contractor will be allowed progress payments on a monthly basis upon preparing the Monthly Payment Application forms and submitting them to the Engineer. The monthly payment shall be based on the items of work satisfactorily completed and the value thereof at unit prices and/or lump sum prices set forth in the contract as determined by the Engineer and will be subject to compliance with Section 7.9 PAYROLLS AND PAYROLL RECORDS.

8.4.2 In the event the Contractor or any Subcontractor fails to submit certified copies of payrolls in accordance with the requirements of Section 7.9 PAYROLLS AND PAYROLL RECORDS, the Engineer may retain the amount due for items of work for which payroll affidavits have not been submitted on a timely basis notwithstanding satisfactory completion of the work until such records have been duly submitted. The Contractor shall not be due any interest payment for any amount thus withheld.

8.4.3 Payment for Materials - The Contractor will also be allowed payments of the manufacturer's, supplier's, distributor's or fabricator's invoice cost of accepted materials to be incorporated in the work on the following conditions:

8.4.3.1 The materials are delivered and properly stored at the site of Work; or

8.4.3.2 For special items of materials accepted by the Engineer, the materials are delivered to the Contractor or subcontractor(s) and properly stored in an acceptable location within a reasonable distance to the site of Work.

8.4.4 Partial payments shall be made only if the Engineer finds that:

8.4.4.1 The Contractor has submitted bills of sale for the materials or otherwise demonstrates clear title to such materials.

8.4.4.2 The materials are insured for their full replacement value to the benefit of the Department against theft, fire, damages incurred in transportation to the site, and other hazards.

8.4.4.3 The materials are not subject to deterioration.

8.4.4.4 In case of materials stored off the project site, the materials are not commingled with other materials not to be incorporated into the project.

8.5 PROMPT PAYMENT §3-125-23 HAR

8.5.1 Any money paid to a Contractor for work performed by a subcontractor shall be disbursed to such subcontractor within ten (10) days after receipt of the money in accordance with the terms of the subcontract; provided that the subcontractor has met all the terms and conditions of the subcontract and there are no bona fide disputes on which the Engineer has withheld payment.

8.5.2 Upon final payment to the Contractor, full payment to all subcontractors shall be made within ten (10) days after receipt of the money, provided there are no bona fide disputes over the subcontractor's performance under the subcontract.

8.5.3 All sums retained or withheld from a subcontractor and otherwise due to the subcontractor for satisfactory performance under the subcontract shall be paid by the contracting officer to the contractor and subsequently, upon receipt from the contracting officer, by the contractor to the subcontractor within the applicable time periods specified in subsection 8.5.2 and section 103-10 HRS.

8.5.3.1 Where a subcontractor has provided evidence to the contractor of satisfactorily completing all work under their subcontract and has provided a properly documented final payment request as described in subsection (8.5.5) of this section, and;

8.5.3.1.a Has provided to the contractor an acceptable performance and payment bond for the project executed by a surety company authorized to do business in the State, as provided in section 8.6 RETAINAGE; or

8.5.3.1.b The following has occurred:

8.5.3.1.b.1 A period of ninety days after the day on which the last of the labor was done or performed and the last of the material was furnished or supplied has elapsed without written notice of a claim given to contractor and the surety, as provided for in section 103D-324 HRS; and

8.5.3.1.b.2 The subcontractor has provided to the contractor:

8.5.3.1.b.2.1 An acceptable release of retainage bond, executed by a surety company authorized to do business in the State, in an amount of not more than two times the amount being retained or withheld by the contractor.

8.5.3.1.b.2.2 Any other bond acceptable to the contractor; or

8.5.3.1.b.2.3 Any other form of mutually acceptable collateral.

8.5.4 If the contracting officer or the contractor fails to pay in accordance with this section, a penalty of one and one-half per cent per month shall be imposed upon the outstanding amounts due that were not timely paid by the responsible party. The penalty may be withheld from future payment due to the contractor, if the contractor was the responsible party. If a contractor has violated subsection 8.5.2 three or more times within two years of the first violation, the contractor shall be referred by the contracting officer to the contractor license board for action under section 444-17(14) HRS.

8.5.5 Final Payment Request. A properly documented final payment request from a subcontractor, as required by subsection 8.5.3, shall include:

8.5.5.1 Substantiation of the amounts requested;

8.5.5.2 A certification by the subcontractor, to the best of the subcontractor's knowledge and belief, that:

8.5.5.2.a The amounts requested are only for performance in accordance with the specification, terms, and conditions of the subcontract;

8.5.5.2.b The subcontractor has made payments due to its subcontractors and suppliers from previous payments received under the subcontract and will make timely payments from the proceeds of the payment covered by the certification, in accordance with their subcontract agreements and the requirements of this section; and

8.5.5.2.c The payment request does not include any amounts that the subcontractor intends to withhold or retain from a subcontractor or supplier in accordance with the terms and conditions of their subcontract; and

8.5.5.2.d The submission of documentation confirming that all other terms and conditions required under the subcontract agreement have been fully satisfied.

8.5.6 The Engineer shall return any final payment request that is defective to the contractor within seven days after receipt, with a statement identifying the defect.

8.5.7 A payment request made by a contractor to the Engineer that includes a request for sums that were withheld or retained from a subcontractor and are due to a subcontractor may not be approved under subsection 8.5.3 unless the payment request includes:

8.5.7.1 Substantiation of the amounts requested; and

8.5.7.2 A certification by the contractor, to the best of the contractor's knowledge and belief, that:

8.5.7.2.a The amounts requested are only for performance in accordance with the specifications, terms, and conditions of the contract;

8.5.7.2.b The subcontractor has made payments due to its subcontractors and suppliers from previous payments received under the contract and will make timely payments from the proceeds of the payment covered by the certification, in accordance with their subcontract agreements and the requirements of this section; and

8.5.7.2.c The payment request does not include any amounts that the contractor intends to withhold or retain from a subcontractor or supplier in accordance with the terms and conditions of their subcontract.

8.5.8 The Engineer shall return any final payment request that is defective to the contractor within seven days after receipt, with a statement identifying the defect.

8.5.9 This section shall not be construed to impair the right of a contractor or a subcontractor at any tier to negotiate and to include in their respective subcontracts provisions that provide for additional terms and conditions that are requested to be met before the subcontractor shall be entitled to receive final payment under subsection 8.5.3 of this section; provided that any such payments withheld shall be withheld by the Engineer.

8.6 RETAINAGE – The Department will retain a portion of the amount due under the contract to the contractor, to ensure the proper performance of the contract.

8.6.1 The sum withheld by the Department from the contractor shall not exceed five percent (5%) of the total amount due the contractor and that after fifty percent (50%) of the contract is completed and progress is satisfactory, no additional sum shall be withheld; provided further that if progress is not satisfactory, the Engineer may continue to withhold as retainage, sums not exceeding five percent (5%) of the amount due the contractor.

8.6.2 The retainage shall not include sums deducted as liquidated damages from moneys due or that may become due the contractor under the contract.

8.6.3 General Obligation Bonds – The contractor may withdraw retainage monies in whole or in part by providing a general obligation bond of the State or its political subdivisions suitable to the Department. The contractor shall endorse over to the Department and deposit with the Department any general obligation bond suitable to the Department, but in no case with a face value less than the value established by law, of the amount to be withdrawn. The Department may sell the bond and use the proceeds in the same way as it may use monies directly retained from progress payments or the final payment.

8.6.4 Any retainage provided for in this section or requested to be withheld by the contractor shall be held by the Engineer.

8.6.5 A dispute between a contractor and subcontractor of any tier shall not constitute a dispute to which the State or any county is a party, and there is no right of action against the State or any county. The State and a county may not be interpleaded in any judicial or administrative proceeding involving such a dispute.

8.6.6 The retention amount withheld by the contractor from its subcontractor shall be not more than the same percentage of retainage as that of the contractor (also applies to subcontractors who subcontract work to other subcontractors) where a subcontractor has provided evidence to the contractor of:

8.6.6.1 A valid performance and a payment bond for the project that is acceptable to the contractor and executed by a surety company authorized to do business in this State;

8.6.6.2 Any other bond acceptable to the contractor; or

8.6.6.3 Any other form of collateral acceptable to the contractor.

8.6.7 A written notice of any withholding shall be issued to a subcontractor, with a copy to the procurement officer, specifying the following:

8.6.7.1 The amount to be withheld;

8.6.7.2 The specific causes for the withholding under the terms of the subcontract; and

8.6.7.3 The remedial actions to be taken by the subcontractor to receive payment of the amounts withheld.

8.6.8 The provisions of this section shall not be construed to require payment to subcontractors of retainage released to a contractor pursuant to an agreement entered into with the contracting officer meeting the requirements of subsection 8.6.3.

8.7 WARRANTY OF CLEAR TITLE - The Contractor warrants and guarantees that all work and materials covered by progress payments made thereon shall be free and clear of all liens, claims, security interests or encumbrances, and shall become the sole property of the Department. This provision shall not, however, be construed as an acceptance of the work nor shall it be construed as relieving the Contractor from the sole responsibility for all materials and work upon which payments have been made or the restoration of any damaged work, or as waiving the right of the Department to require the fulfillment of all the items of the contract.

8.8 FINAL PAYMENT

8.8.1 Upon final settlement, the final payment amount, less all previous payments and less any sums that may have been deducted in accordance with the provisions of the contract, will be paid to the Contractor, provided the Contractor has submitted a Tax Clearance Certificate from the Department of Taxation and the Internal Revenue Service to the effect that all taxes levied or accrued under Federal and State Statutes against the contractor have been paid.

8.8.2 Sums necessary to meet any claims of any kind by the State may be retained from the sums due the Contractor until said claims have been fully and completely discharged or otherwise satisfied.

8.9 CLAIMS ARISING OUT OF PAYMENT FOR REQUIRED WORK - If the Contractor disputes any determination made by the Engineer regarding the amount of work satisfactorily completed, or the value thereof, or the manner in which payment therefore is made or calculated, it shall notify the Engineer in writing of the specific facts supporting the Contractor's position. Such notice shall be delivered to the Engineer no later than thirty (30) days after the Contractor has been tendered payment for the subject work, or, if no payment has been tendered, not later than fifty (50) days after it has submitted the Monthly Payment Application required under Section 8.4 PROGRESS PAYMENTS herein to the Engineer for the work that is the subject of the dispute. The delivery of the written notice cannot be waived and shall be a condition precedent to the filing of the claim. No claim for additional compensation for extra work or change work shall be allowed under this provision, unless the notice requirements of Article 4 SCOPE OF WORK have been followed. Acceptance of partial payment of a Monthly Payment Application amount shall not be deemed a waiver of the right to make a claim described herein provided the notice provisions are followed. The existence of or filing of a payment claim herein shall not relieve the Contractor of its duty to continue with the performance of the contract in full compliance with the directions of the Engineer. Any notice of claim disputing the final payment made pursuant to Section 8.8 FINAL PAYMENT must be submitted in writing not later than thirty (30) days after final payment that is identified as such has been tendered to the Contractor.

ARTICLE 9 - CONFIDENTIALITY OF PERSONAL INFORMATION

9.1 Definitions. "Personal information" means an individual's first name or first initial and last name in combination with any one or more of the following data elements, when either name or data elements are not encrypted:

1. Social Security number,
2. Driver's license number or Hawaii identification card number; or
3. Account number, credit or debit card number, access code, or password that would permit access to an individual's financial information.

Personal information does not include publicly available information that is lawfully made available to the general public from federal, state or local government records.
"Technological safeguards" means the technology and the policy and procedures for use of the technology to protect and control access to personal information.

9.2 Confidentiality of Material.

(1) All material given to or made available to the CONTRACTOR by the STATE by virtue of this Contract which is identified as personal information shall be safeguarded by the CONTRACTOR and shall not be disclosed without the prior written approval of the STATE.

(2) CONTRACTOR agrees not to retain, use, or disclose personal information for any purpose other than as permitted or required by this Contract.

(3) CONTRACTOR agrees to implement appropriate "technological safeguards" that are acceptable to the STATE to reduce the risk of unauthorized access to personal information.

(4) CONTRACTOR shall report to the STATE in a prompt and complete manner any security breaches involving personal information.

(5) CONTRACTOR agrees to mitigate, to the extent practicable, any harmful effect that is known to CONTRACTOR because of a use or disclosure of personal information by CONTRACTOR in violation of the requirements of this paragraph.

(6) CONTRACTOR shall complete and retain a log of all disclosures made of personal information received from the STATE, or personal information created or received by CONTRACTOR on behalf of the STATE.

9.3 Security Awareness Training and Confidentiality Agreements.

(1) CONTRACTOR certifies that all of its employees who will have access to the personal information have completed training on security awareness topics relating to protecting personal information.

(2) CONTRACTOR certifies that confidentiality agreements have been signed by all of its employees who will have access to the personal information acknowledging that:

(a) The personal information collected, used or maintained by the CONTRACTOR will be treated as confidential;

(b) Access to the personal information will be allowed only as necessary to perform the Contract; and

(c) Use of the personal information will be restricted to uses consistent with the services subject to this Contract.

9.4 Termination for Cause. In addition to any other remedies provided for by this Contract, if the STATE learns of a material breach by CONTRACTOR of this paragraph by CONTRACTOR, the State may at its sole discretion:

(1) Provide an opportunity for the CONTRACTOR to cure the breach or end the violation; or

(2) Immediately terminate this Contract.

9.5 Records Retention.

(1) Upon any termination of this Contract, CONTRACTOR shall pursuant to chapter 487R, HRS, destroy all copies (paper or electronic form) of personal information received from the STATE.

(2) The CONTRACTOR and any subcontractors shall maintain the files, books, and records that relate to the Contract, including any personal information created or received by the CONTRACTOR on behalf of the STATE, and any cost or pricing data, for three (3) years after the date of final payment under the Contract. The personal information shall continue to be confidential and shall not be disclosed without the prior written approval of the STATE. After the three (3) year retention period has ended, the files, books, and records that contain personal information shall be destroyed pursuant to chapter 487R, HRS.

ADDITIONAL GENERAL CONDITIONS FOR CONSTRUCTION CONTRACTS

The following sections of the Hawaii Administrative Rules, Chapter §3-125 are hereby incorporated and made a part of the General Conditions.

CHANGES FOR CONSTRUCTION CONTRACTS - §HAR 3-125-4

1. Change Order. The procurement officer, at any time, and without notice to any surety in a signed writing designated or indicated to be a change order, may make changes in the work within the scope of the contract as may be found to be necessary or desirable. Such changes shall not invalidate the contract or release the sureties, and the contractor will perform the work as changed, as though it had been part of the original contract. Minor changes in the work may be directed by the procurement officer with no change in contract price or time or performance.

2. Adjustments of price or time for performance. If any change order increases or decreases the contractor's cost of, or the time required for performance of any part of the work under this contract, whether or not changed by the order, an adjustment may be made and the contract modified in writing accordingly. Any adjustment in contract price made pursuant to this clause shall be determined in accordance with the price adjustment clause of this contract. Failure of the parties to agree to an adjustment shall not excuse a contractor from proceeding with the contract as changed, provided that the State promptly and duly makes such provisional adjustments in payments or time for the direct costs of the work as changed as the State deems reasonable. The right of the contractor to dispute the contract price or time required for performance or both shall not be waived by its performing the work, provided however, that it follows the notice requirements for disputes and claims established by the contract or these rules.

3. Time Period for Claim. Within thirty days after receipt of a written change order under paragraph (1), unless such period is extended by the procurement officer in writing, the contractor shall file a notice of intent to assert claim for an adjustment. The requirement for timely written notice cannot be waived and shall be a condition precedent to the assertion of a claim.

4. Claim barred after final payment. No claim by the contractor for an adjustment hereunder shall be allowed if written notice is not given prior to final payment under this contract.

5. Claims not barred. In the absence of such a change order, nothing in this clause shall restrict the contractor's right to pursue a claim under the contract or for breach of contract.

PRICE ADJUSTMENT FOR CONSTRUCTION CONTRACTS - §HAR 3-125-13.

1. Price adjustment. Any adjustment in contract price pursuant to a clause in this contract shall be made in one or more of the following ways;
   a. By agreement on a fixed price adjustment before commencement of the pertinent performance or as soon thereafter as practicable;
   b. By unit prices specified in the contract or subsequently agree upon;
   c. Whenever there is a variation in quantity for any work covered by any line item in breakdown costs provided by the contractor pursuant to contractual pre-work submittal requirements, by the procurement officer, at the procurement officer's discretion, adjusting the lump sum price proportionately;
   d. In such other manner as the parties may mutually agree;
   e. At the sole option of the procurement officer, by the costs attributable to the event or situation covered by the change, plus appropriate profit or fee; or
   f. In the absence of agreement between the parties, by a unilateral determination by the procurement officer of the costs attributable to the event or situation covered by the clause, plus appropriate profit or fee, all as computed by the procurement officer in accordance with generally accepted accounting principles and applicable sections of chapters 3-123 and 3-126 (of the Hawaii Administrative Rules).

2. Determining the cost or credit. In determining the cost or credit to the State resulting from a change, the allowances for all overhead, extended overhead resulting from adjustments to contract time (including home office and field overhead) and profit combined, shall not exceed the percentages set forth below:

   a. For the contractor, for any work performed by its own labor forces, fifteen per cent of the cost;
   b. For each subcontractor involved, for any work performed by its own forces, fifteen per cent of the cost;
   c. For the contractor or any subcontractor, for work performed by their subcontractors, ten per cent of the amount due the performing subcontractor.

3. Percentages for fee and overhead. Not more than three line item percentages for fee and overhead, not to exceed the maximum percentages shown above, will be allowed regardless of the number of tier subcontractors.

PROMPT PAYMENT BY CONTRACTORS TO SUBCONTRACTORS – §HAR 3-125-23

1. Prompt payment clause. Any money, other than retainage, paid to a contractor shall be dispersed to subcontractors within ten days after receipt of the money in accordance with the terms of the subcontract; provided that the subcontractor has met all the terms and conditions of the subcontract and there are no bona fide disputes; and, upon final payment to the contractor, full payment to the subcontractor, including retainage, shall be

made within ten days after receipt of the money; provided that there are no bona fide disputes over the subcontractor's performance under the subcontract.

CHANGES TO THE GENERAL CONDITIONS

1. Under ARTICLE 1 – DEFINITIONS, insert the following:

   "1.70 CONTRACTING OFFICER REPRESENTATIVE (COR): The Department of Defense Project Manager (PM)."

2. Under ARTICLE 2 - PROPOSAL REQUIREMENTS AND CONDITIONS, modify section 2.6 - SUBSTITUTION OF MATERIALS AND EQUIPMENT BEFORE BID OPENING, by renaming section 2.6 - SUBSTITUTION BEFORE CONTRACT AWARD and deleting subsections 2.6.1, through 2.6.6 and substitute the following three new subsections and related paragraphs 2.6.1 through 2.6.3:

   "2.6.1 For Substitutions after the Letter of Award is issued; refer to Section 6.3 SUBSTITUTION AFTER CONTRACT AWARD.

   2.6.2 Unless specifically required otherwise in the contract documents, Offerors shall not submit products, materials, equipment, articles or systems for review or approval prior to submitting their Offers.

   2.6.3 Offerors shall prepare their Offer forms based on the performance requirements of the materials, equipment, articles or systems noted on the drawings and specifications. If trade names, makes, catalog numbers or brand names are specified, Offerors shall infer that these items indicate the quality, style, appearance or performance of the material, equipment, article, or systems to be used in the project. The products and equipment of manufacturers listed throughout the specifications and other manufacturers are acceptable provided they meet or exceed the materials and construction requirements specified and are installed as specified."

3. Under Article 6, delete subsections 6.3.2.4 and 6.3.3.

STATE OF HAWAII

SPECIAL CONDITIONS

1. Non-Liability of STATE Employees. The HOPA and any of the HOPA's duly authorized representatives and subordinates, in carrying out the provisions of this Agreement or in exercising any power or authority granted herein, shall not be held personally liable in any way, it being understood that in such matters they act as agents and representatives of the STATE.

2. In Accordance with HRS 103D-713, Paragraph 7 Indemnification and Defense of the General Conditions, is amended as follows:

   "7. Indemnification and Defense. The CONTRACTOR shall, indemnify and hold harmless the governmental body and its officers, employees, and agents from and against any liability, damage, loss, cost, and expense, including reasonable attorneys' fees, and all claims, suits, and demands therefore arising out of or resulting from the negligent, reckless, intentional, or wrongful acts, errors, or omissions of the contractor, the contractor's employees, officers, agents, or subcontractors in the performance of the contract or the contractor's professional services, and the provisions shall remain in full force and effect notwithstanding the expiration or early termination of the contract."

3. Paragraph 2. Relationship of Parties: Independent Contractor Status and Responsibilities, Including Tax Responsibilities, subparagraph f. of the General Conditions is amended by adding the following:

   "Insurance. Prior to commencing with the work, the Contractor shall, at its own expense, obtain and submit to the Department, Certificate of Insurance from an insurance company authorized by the laws of the State to issue such insurance in the State of Hawaii showing full policy coverage of the Contractor.

   Required Types of Insurance:

   A. Commercial General Liability (CGL): Coverage shall be maintained with limits of no less than $1 million per occurrence and $2 million in aggregate. This insurance shall protect against claims arising from bodily injury, personal injury, and property damage that may result from or be related to the performance of services under the contract. The STATE shall be named as additional insured.
   B. Automobile Liability: Coverage shall include a limit of no less than $1 million per accident, covering claims for bodily injury and property damage resulting from the ownership, maintenance, or use of any owned, hired, or non-owned vehicles used in the performance of the contract. The STATE shall be named as additional insured.
   C. Workers' Compensation (WC): The CONTRACTOR shall maintain workers' compensation insurance as required by the Hawaii Revised Statutes (HRS) Title 21, Section 386. This coverage shall ensure compliance with state laws regarding the provision of benefits to employees for work-related injuries or illnesses, and Employer's Liability: Coverage shall be maintained with the following minimum limits:
      - $100,000 per accident for bodily injury.
      - $500,000 disease-policy limit.
      - $100,000 disease limit per employee.
   D. If required by the Department of Defense in the event Hazardous Materials (as defined herein) are or may be involved or used, Pollution Liability insurance coverage with a combined single limit coverage of at least $1,000,000 per occurrence which shall cover environmental liabilities, including, without limitation, claims for bodily injury, property damage, environmental damage, and remediation costs resulting from pollution conditions caused by the Contractor or the Contractor Agents and/or the conduct of the Services.
   E. Waiver of Subrogation: CONTRACTOR agrees to a waiver of any right to subrogation against the State of Hawaii and their respective employees and agents by each insurer

under each required policy described herein except for the Professional Liability (Errors and Omission) policy. When required by the insurer, or should a policy condition not permit the CONTRACTOR to enter into a pre-loss agreement to waive subrogation without an endorsement, CONTRACTOR shall notify the insurer and request that the policy be endorsed with a Waiver of Transfer of Rights of Recovery Against Others, or its equivalent. This Waiver of Subrogation requirement shall not apply to any policy, which includes a condition specifically prohibiting such an endorsement, or voids coverage should the CONTRACTOR enter into such an agreement on a pre-loss basis.

It is the responsibility of the CONTRACTOR to notify the STATE of any changes to its insurance policies or if the Contractor receives a notice of cancellation of any of its insurance policies. The Contractor will immediately provide written notice to the STATE should the insurance policies evidenced on its Certificate of Insurance form be cancelled, limited in scope, or not renewed upon expiration.

In addition, CONTRACTOR's insurance policies with the exception of the Worker's Compensation and Professional Liability policies, shall contain the following clauses:

1. The State of Hawaii is added as an additional insured as respects to operations performed for the State of Hawaii.
2. It is agreed that any insurance maintained by the State of Hawaii will apply in excess of, and not contribute with, insurance provided by this policy.

Furthermore, the Certificate of Insurance shall contain the reference to the project name and the project number"

4. Conflict. If there is a conflict between this Attachment — S5 (Special Conditions) and the General Conditions, this Attachment — S5 (Special Conditions) shall govern and control unless otherwise specified.